The WIRELESS ENGINEER AND EXPERIMENTAL WIRELESS

VOL. VIII. DECEMBER, 1931. No. 99.

# The Stenode Radiostat.

IN our Correspondence columns we publish a letter from the British Radiostat Corporation, Ltd., of Montreal, Canada, in which they complain that some of our contributor's references to the "Stenode Radiostats" exhibited at Olympia were likely to create a false impression. We are very pleased to publish this letter, or indeed, any letter which contributes in the slightest degree to removal of the doubts and uncertainties which exist in the minds of many people concerning this apparatus.

Without wishing in any way to usurp our contributor's privilege of replying to the criticism of his references to the Stenode, we feel that we should make some reference to the matters raised in the latter part of the letter.

It was in January, 1930, that we first made editorial reference to this apparatus, but said that "so little definite information concerning the apparatus has been published, however, that it is difficult to tell just how much of what has been published is due to journalistic imagination, and for the same reason we cannot discuss or criticise the apparatus." The Stenode was born under a journalistic cloud, the effect of which has been slow to dispel. We do not for a moment wish to question the undoubted right of a company to choose its own method of making its wares known to the public, but in view of the tone of complaint which pervades the latter part of the letter, we feel bound to point out that, if the name "Stenode" still suggests to many people, glaring headlines and extravagant claims, and predisposes them to adopt a somewhat suspicious attitude, there can be no doubt as to where the blame lies. In the present case this atmosphere was especially unfortunate because of the absence of any satisfactory explanation of the results claimed.

In common with many others, we have endeavoured to keep an open mind on the subject, to assume that the Stenode did something beyond what had previously been considered possible, and to be always on the look out for a possible explanation. In August, 1930, we said "We have already given a warning against jumping to hasty conclusions when the combination of several waves is associated with rectification. If the claims made for the Stenode Radiostat are substantiated we feel sure that the explanation will be found in this direction."

The letter from the Corporation refers to the Stenode principle. What is the Stenode principle? Can it be simply stated? It obviously has nothing to do with a crystal, since neither of the sets shown at Olympia contained a crystal. The sets, we believe were superheterodynes with very sharply tuned intermediate circuits and audio-frequency correction. Is this combination the Stenode principle, or does the principle contain a special type of detector? If the owner of a superheterodyne uses frequency correction in the audio output, does he

thereby convert it into a Stenode, or must he improve the sharpness of his intermediate tuning to do so, and if so, by how much? The concluding sentence of the letter suggests that sharp resonance and audio-correction constitute the Stenode principle. Is this only so when applied to a superheterodyne, or does the Stenode principle extend to straight sets?

In his letter the Secretary states that the *calculated* and *measured* response curves do not agree and that, so far, no satisfactory explanation of this discrepancy has been published. We feel sure that if the Corporation were to publish these calculations and measurements and the details of the apparatus on which the tests were made, the explanation would soon be forthcoming.

The letter states somewhat naïvely, that "the fact that so far no satisfactory explanation of this discrepancy has been published need not hinder us from making the fullest possible commercial application of Dr. Robinson's invention." We do not suppose that it has done so, unless we entirely misinterpret the objects for which the British Radiostat Corporation, Ltd., exists. We should have thought, however, that an invention based on a principle which involves a discrepancy for which no satisfactory explanation has been found would have caused the inventor to spend laborious days and sleepless nights until his invention was put upon a more solid foundation. Unlike the coherer and the crystal detector, to which reference is made in the letter, the Stenode receiver consists of a chain of elements, the characteristics of which are known, and we see no reason for the pessimism of the concluding lines of the letter, which suggest that general agreement on the theory lies in the dim and distant future.

G. W. O. H.

# New Czech 200-kW. Station.

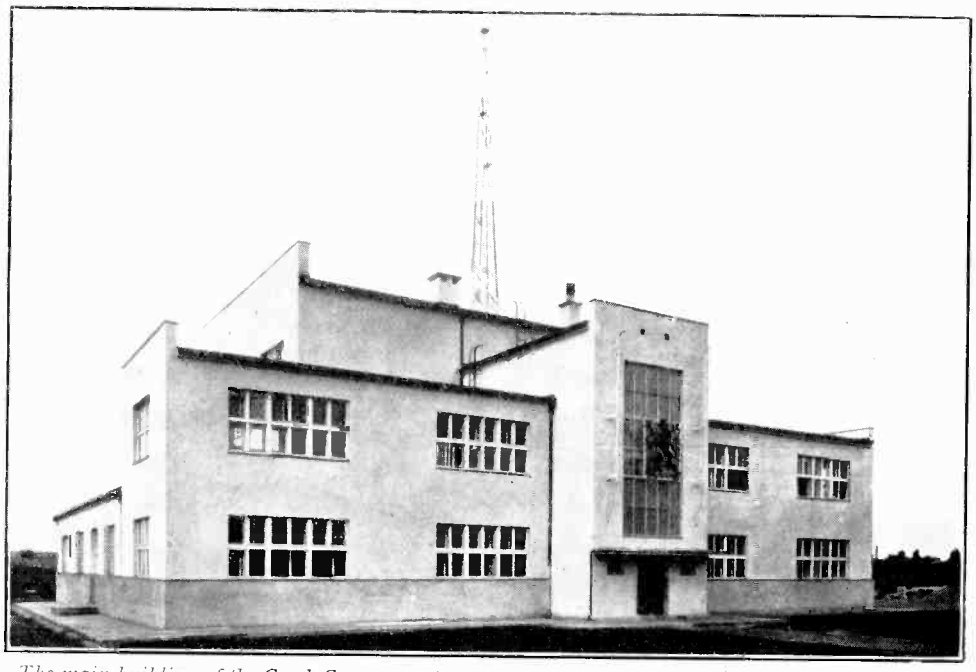

*The main building of the Czech Government's new 200-kW. broadcasting station which was opened at Cesky-Brod, 20 miles east of Prague, on November 21st. Designed by the International Telephone and Telegraph Laboratories, this interesting station—the most powerful in Europe—is claimed to give a practically straight frequency characteristic from 30 to 10,000 cycles, with a variation of not more than 3 decibels over the whole r.f. range.*

# The Double Beat Method of Frequency Adjustment.*

## Applications to the Measurement of Capacity and Inductance.

*By F. M. Colebrook, B.Sc., D.I.C., A.C.G.I.*

*(Wireless Division, National Physical Laboratory.)*

**SUMMARY.**—The double beat method of frequency adjustment is based on the comparison between a fixed audio-frequency and the heterodyne frequency produced by the interference of two radio-frequencies. It is necessary to guard against mutual control by the two radio-frequencies. (Section 2.)

The apparatus required for the various applications of the method consists of an absorption wave-meter, a valve maintained oscillator, a second oscillator with a detector and audio-frequency amplifier, and an audio-frequency oscillator. Details of these are given in Section 3. This apparatus can be applied to the accurate adjustment of small frequency changes (Section 2); the detection of resonance with a sensitivity of one part in a hundred-thousand if required (Section 4a); measurement of capacity, up to microfarads, at radio-frequencies, by parallel or series substitution (Section 4c); measurement of capacity and of self-inductance and self-capacity of audio-frequency coils at high audio- and low radio-frequencies.

A related method of measuring capacities at audio-frequencies is described in Section 5. A pure wave form is used in the measurement circuit but this is made to control a distorted wave form in a detector circuit so that high harmonics can be used for frequency adjustment.

A discussion and comparison of the resistance errors likely to be associated with the above method of resonance detection and with maximum current or voltage methods is given in an appendix.

### 1. Introduction.

THE Institution of Electrical Engineers has recently published a paper by R. M. Wilmotte and the present writer on a method of measuring resistance and reactance at radio-frequencies.† It may not be generally realised that the method of resonance indication and the double beat method of frequency adjustment on which the above mentioned measurement of resistance is based is very conveniently applicable, using the same apparatus, to a variety of other measurements required in work with alternating current at radio- and audio-frequencies, giving to these measurements a greatly enhanced degree of sensitiveness. For this reason, and also because the actual apparatus has been considerably modified since the original paper was written, it has been thought worth while to supplement the original publication by the following practical notes. None of the methods here described is essentially novel, but certain refinements of technique have been introduced which give them a greatly enhanced sensitiveness and adaptability. At the same time attention is directed to certain possible errors and the means of avoiding them.

### 2. The Double Beat Principle.

The double beat method of frequency adjustment is already familiar to those engaged in work at radio-frequencies and needs no more than a brief description for convenience of reference, and in order to call attention to the need for a certain precaution in its application.

The rectification of the sum of two radio-frequency currents or potential differences of frequencies $f_1$ and $f_2$ ($f_1 > f_2$) gives rise to a current of more or less complex wave form having a major component of frequency $f_1 - f_2$. Assuming $f_2$ to be known and constant, $f_1$ can be adjusted so that $f_1 - f_2$ comes within the audible range. It can then be combined (in telephones, for example) with a current of known audio-frequency $f_a$, the combination giving rise to, say, $b$ beats

* MS. received by the Editor, March, 1931.

† "A new method of measurement of resistance and reactance at radio-frequencies."—*J.I.E.E.*, Vol. 69 (1931), pp. 997–522.

per second. Then it follows that

$$(f_1 - f_2) - f_a = \pm b$$

or

$$f_1 = f_2 + f_a \pm b.$$

By adjustment of $f_1$, $b$ can be made negligibly small so that

$$f_1 = f_2 + f_a$$

the accuracy of the comparison being of the order $b/f_2$, which can in most cases be made parts in a million if required, the absolute accuracy being, of course, dependent on that of $f_2$ and $f_a$.

It is assumed in the above simple description that the frequencies $f_1$ and $f_2$ do not affect each other. Actually, as explained and discussed by Professor Appleton in his paper, "The Automatic Synchronisation of Triode Oscillators" (*Camb. Phil. Soc.*, 1922, Vol. 21, pp. 231–240) there is, in general, a certain degree of mutual control of frequency between coupled oscillators, particularly in the neighbourhood of synchronism. This effect, to which Professor Appleton gives the graphic name "attraction of frequencies," is well known, but it is perhaps not so widely appreciated that a measurable degree of "attraction" may exist between one oscillator and another tuned to the neighbourhood of synchronism with a harmonic of it. Definite evidence of this was found in one case where the coupling between the oscillators was fairly close and the one was tuned to the fifth harmonic of the other plus 200 cycles per second, the fundamental frequency being about 200 kilocycles.

In practice, errors from this cause can be eliminated by using the loosest practicable coupling between the oscillators, by using a harmonic of one of the oscillators, and by making the audible heterodyne note as high as convenience and circumstances will permit.

Given these precautions, the method has obvious applications to a number of types of frequency adjustment. The fixed audio-frequency of reference ($f_a$) being adjusted by beats with a standard fork or sonometer, changes of fundamental or harmonic frequency of $2 f_a$ cycles per second can be made by adjusting the heterodyne beat from the one side to the other side of the silence point, repeating the process by successive adjustments of each oscillator. It is easy to obtain by a suitable choice of harmonics of $f_1$ or $f_2$ accurately known frequency steps of $2nf_a$ or $2f_a/n$ cycles per second, $n$ being the harmonic order. Using the second type, for example, a fine adjustment condenser on an oscillator having a frequency of a million cycles or so can be adjusted to read changes of one cycle per second. This has been found useful for investigations of frequency stability. Another typical application is the calibration of a heterodyne wavemeter by reference to some known source (a B.B.C. station, for example) and a known tuning fork. As a further example, the transmissions at present being sent out from the National Physical Laboratory for some measurements on the Heaviside layer under the direction of Professor Appleton, transmissions which involve a frequency swing of 16 kilocycles on a mean frequency up to three million or so, are adjusted as to the frequency swing by the double beat method, using four shifts of four kilocycles determined by a two kilocycle fork. In this case the transmitter itself is one of the two radio-frequency oscillators required.

These are, of course, purely applications of frequency adjustment involving only the double beat principle. The further applications of this principle involve also a special means of resonance detection. Of this more will be said later, but it will first be well to give some notes on suitable circuits and auxiliary apparatus.

### 3. Apparatus Required.

The apparatus required consists of :—

(*a*) A valve-maintained radio-frequency oscillator, with provision for fine tuning control.

(*b*) A similar radio-frequency oscillator combined with a rectifier and an audio-frequency amplifier.

(*c*) A valve-maintained audio-frequency oscillator, preferably combined with an output stage.

Means must be provided for combining the beat frequency output given by the first two oscillators with the audio-frequency output of the third in the same telephones or loud-speaker, with suitable control of the amplitudes so as to give maximum beat sensitivity.

In addition to the above oscillators there will be required an absorption wavemeter and one or more tuning forks of known

frequency (or any other apparatus for the measurement of audio-frequencies). With the exception of the wavemeter and tuning forks or sonometer, the apparatus can be all of commercial class.

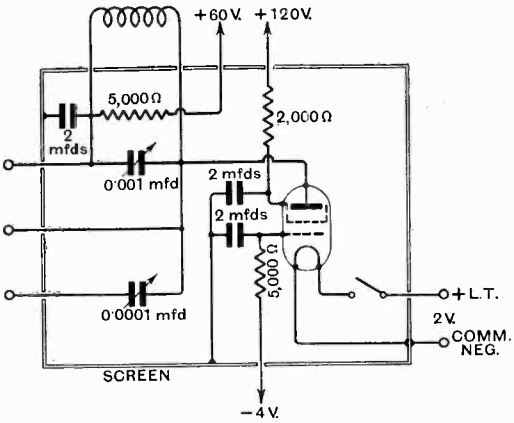


Fig. 1a.

With regard to the oscillating and amplifying circuits, there are, of course, a large number of possible variations. The arrangements shown in Figs. 1*a*, 1*b*, 1*c*, which are respectively the 1st oscillator, 2nd oscillator and detector amplifier, and the audio-frequency oscillator, make use of screen-grid valves as "dynatron" or negative resistance oscillators, and have the advantage of being available for all frequencies—audio and radio—up to about ten million cycles per second without any modification of the circuits other than the changing of the two-terminal coils required. In addition, this type of circuit is very suitable from the point of view of frequency stability, a very important factor in the present connection. The potentiometer arrangement for variation of the output of the audio-frequency oscillator (Fig. 1*c*) should be noted. It has the advantage of being without effect on the oscillation frequency. The small-capacity variable condensers connected to the alternating potential sides of the radio-frequency oscillating circuits (Figs. 1*a* and 1*b*) are for use in conjunction with larger variable condensers which can be connected in series with them and used for fine adjustments of frequency, the total effective range of these condensers being determined, of course, by the settings of the smaller condensers.

A potentiometer volume control is provided in the second oscillator. There is also a simple arrangement for cutting out one of the audio-frequency amplifying stages (by the removal of one valve and the bridging of its grid connection across the grid of the last valve). For most purposes the single stage of audio-frequency amplification is quite sufficient, but when very high harmonics are used, or when it is desired to operate a loud-speaker, the two stages may be required.

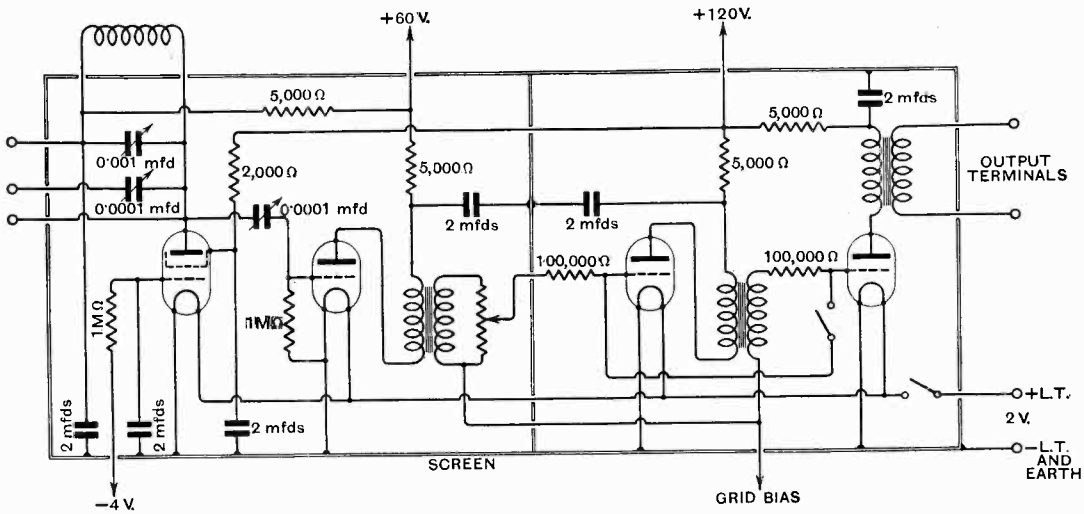


Fig. 1b.

Each unit is housed in a metal case with the condenser dials and other controls mounted on the front face. The radio-frequency oscillators have sockets and terminals on the tops of the cases for mounting

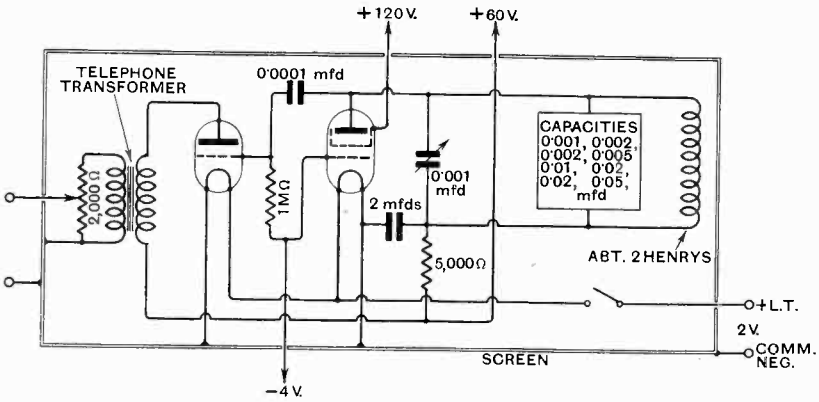


Fig. 1c.

the various two-terminal coils required, and terminals are also provided for the connection of extra capacity externally.

This assembly of apparatus has been found to be a valuable addition to the equipment of the Wireless Division of the National Physical Laboratory. Its application to the determination of frequency changes has already been indicated. It is further applicable to the measurement of inductance and capacitance at audio- and radio-frequencies with a high degree of sensitiveness. These applications depend on the same coupled circuit phenomenon as the resistance measurement previously referred to. A brief discussion of the relevant part of this matter will now be given in order to emphasise its applicability to these additional measurements.

### 4. (*a*) Resonance Detection by the Effect of a Coupled Circuit on Oscillator Frequency.

The fundamental principle involved in this method of resonance detection is not new, and means of applying it similar to those here described have probably been used before. The writer has not been able, however, to find any previous published account so there would appear to be a case for giving a brief description of the matter.

Referring to Fig. 2, the frequency of the first oscillator (circuit No. 2) will vary as shown in Fig. 3 when the measurement circuit (circuit No. 1) is tuned through resonance. It is shown in Appendix I that, subject to a small correction for an effect of the resistance of circuit 1, the point $C_1$ at which the frequency of circuit 2 is unaffected by the coupling to circuit 1 is given by

$$\omega^2 L_1 C_1 = 1$$

where $\omega$ is the angular frequency of the original undisturbed oscillation of circuit 2.

For the determination of $C_1$, circuit 1 is open-circuited and circuit 3 is made to heterodyne at the fixed audio-frequency $f_a$ (which need not be known) with some suitable harmonic of circuit 2. The adjustment of the heterodyne frequency to that of the audio oscillator is, of course, made by eliminating the beats between them by adjustment of circuit 3. When circuit 1 is closed and the tuning of it varied by means of $C_1$, the frequency of circuit 2, and consequently the heterodyne frequency in the output of circuit 3, is varied as shown in Fig. 3, beats will be heard between this heterodyne frequency and the audio-frequency $f_a$. When the point $C_1$ is reached the initial frequency conditions are restored and the audible beats are eliminated.

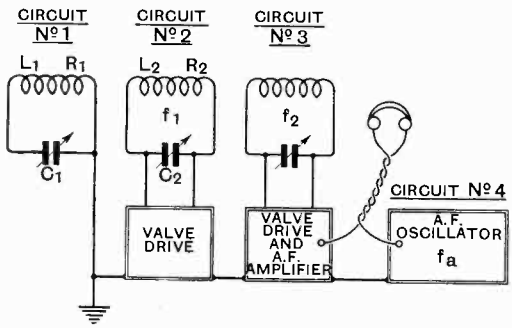


Fig. 2.

The adjustment is exceedingly sensitive. It is generally necessary to have a long controlling handle on condenser $C_1$, the final

adjustment being made by a light tap with a pencil on the end of this handle. The sensitivity will be higher, the higher the order of the harmonic of circuit 2, which is heterodyning with circuit 3. A very loose coupling between circuits 1 and 2 will, in general, suffice. The closer the coupling the steeper the frequency changes, but an excessive coupling may lead to discontinuous changes in frequency. It is never difficult to avoid this condition.

A number of applications of this method of detecting resonance will now be described.

### 4. (*b*) Use as Resonance Indicator for Absorption Wavemeter.

The frequency of the oscillations of circuit 2 can be determined by making circuit 1 an absorption wavemeter and finding the resonance value of the tuning condenser in the manner indicated. A slight error is introduced, however, on account of the fact that the frequency of circuit 2 will depend to some slight extent on its resistance, which is increased by the coupling to circuit 1. It is, therefore, necessary to consider the probable magnitude of this error.

It is shown in Appendix I that the difference $\delta C_1$ between the true and observed values of $C_1$ is given very approximately by

$$\frac{\delta C_1}{C_1} = 2\left(\frac{C_1}{C_2}\right) R_1 \frac{1}{\omega} \frac{\partial \omega}{\partial R_2}$$

For the negative resistance type of oscillator used in this apparatus

$$\omega \approx \frac{1}{\sqrt{LC}}\left(1 - \frac{R_2}{2R_a}\right)$$

and

$$\frac{L_2}{C_2 R_2} = R_a$$

where $R_a$ is the effective negative slope resistance under the conditions of oscillation. The substitution of these values gives as a very approximate result

$$\frac{\delta C_1}{C_1} = \frac{R_1}{\omega L_1} \cdot \frac{R_2}{\omega L_2}$$

so that with coils of reasonably low resistance the error should not exceed parts in ten thousand.

With a triode valve oscillator the error may be slightly greater. Thus with a Hartley circuit $(2/\omega)(\partial\omega/\partial R_2)$ was found to be between $10^{-5}$ and $10^{-4}$.

It should be noted that any method of resonance indication which involves the dissipation of power in the wavemeter will be liable to error from the same cause. It is shown in Appendix I that the error in the

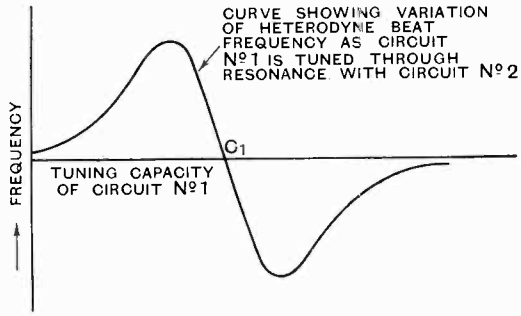


Fig. 3.

case of a maximum wavemeter current indicator is given approximately by

$$\frac{\delta C_1}{C_1} = \frac{2M^2\omega^2}{R_1} \frac{1}{\omega} \frac{\partial \omega}{\partial R_2}$$

or putting $W$ for the power consumed in the wavemeter and $I_2$ for the R.M.S. value of the current in the oscillator

$$\frac{\partial C_1}{C_1} = \frac{2}{\omega} \frac{\partial \omega}{\partial R_2} \frac{W}{I_2^2}$$

The error, therefore, depends on the ratio of the power consumed in the wavemeter to that available in the oscillator, and may be quite appreciable in the case of oscillators of low power.

In the substitution measurements described below, this error in the resonance capacity setting plays no part.

### 4. (*c*) Measurement of Capacity at Radio-frequencies by Substitution.

The capacity to be measured forms part of the tuning capacity of circuit 1. The centre or zero beat condition having been determined as already explained, the capacity is replaced by a known capacity which is varied so as to restore the zero beat condition.

The principle of the method is well known and is very commonly employed with other means of resonance detection. The particular feature of the method of resonance detection here described is its extreme sensitivity, which makes it available for the

measurement of quite large capacities in this way. It was found, for example, that even with a hundred thousand $\mu\mu$F. tuning circuit 1 (to about 60 kilocycles) the resonance detection by the double beat method was definite to 1 $\mu\mu$F.

Given a standard calibrated variable condenser of, say, 1500 $\mu\mu$F. and sets of fixed condensers (1, 2, 2, 5 in thousandths, hundredths and tenths of microfarads) the whole set can be calibrated by substitution in terms of the variable standard by means of simple addition and subtraction arrangements, at any radio-frequency up to the limits imposed by the condensers themselves. (It must be remembered that in measuring large capacities at radio-frequencies the effect of the inductance of the leads may become quite appreciable, causing an apparent variation of capacity with frequency. For example, 0.1 $\mu$F. with an inductance of 1 $\mu$H. due to the leads would appear to be 0.1014 $\mu$F. at 60 kilocycles.)

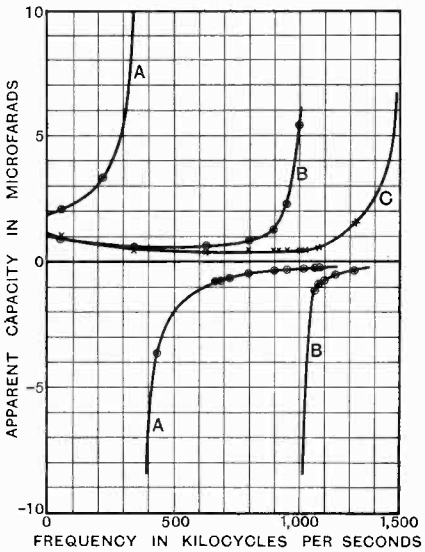


Fig. 4.

A special case of some interest from the point of view of the design of radio-frequency apparatus is the measurement of the apparent capacity of paper dielectric condensers of large capacity (1 and 2 $\mu$F.) intended for use as by-pass condensers. Such condensers can be measured with sufficient accuracy for such purposes by connecting them in series with the coil of circuit 1, between the coil and the main tuning capacity. If $C_1$ and $C_2$ be the tuning capacities when the large capacity $C_s$ is introduced in series and when it is removed respectively, then

$$C_s = \frac{C_1 C_2}{C_1 - C_2}$$

It is convenient to choose $C_2$ so that $C_1 - C_2$ is about 1,000 $\mu\mu$F., so that the changes can be read accurately on a standard variable air condenser. Three commercial condensers were examined in this way. The results, expressed as effective capacities, are shown in the curves of Fig. 4. Curve *A* refers to a condenser of nominally 2 $\mu$F., and curves *B* and *C* to condensers of nominally 1 $\mu$F. each. At high frequencies the apparent capacity of such condensers will be largely dependent on the leads connected to them. In the measurements recorded in Fig. 4, these were as short as possible—about an inch long. The results indicate that the values of by-pass condensers intended for use at high radio frequencies must be chosen with some care and considered in relation to the disposition of the leads associated with them. It is interesting to observe that over the range of frequencies examined, the condensers show no sign of any internal resonances due to their own internal distributed inductance and capacity. A lead inductance of one-tenth of a microhenry is sufficient to account for the resonance of the 2 $\mu$F. condenser at 350 kilocycles.

### 4. (*d*) Measurements at High Audio- and Low Radio-frequencies.

Frequencies in the region 10–30 kilocycles are apt to be troublesome from a measurement point of view, since they lie at the extreme limits of the ranges of sonometers and wavemeters. Measurements of capacity (by substitution) and of the inductance and self-capacity of audio-frequency coils can, however, be carried out at these frequencies without much difficulty by the double beat methods here described. Circuits 1 and 2 are tuned to the fundamental frequency and circuit 3 to some suitable harmonic which lies in the radio-frequency range. Measurements of capacity can then be made by substitution in circuit 1, utilising the centre resonance point as described in section 4 (*b*).

Measurements of the inductance and self-

capacity of audio-frequency coils, the natural frequencies of which lie in the region under consideration, can be made by finding the resonance points with small tuning capacities down to the limit of the variable condenser employed (in circuit 1) and plotting the reciprocal of the square of the frequency

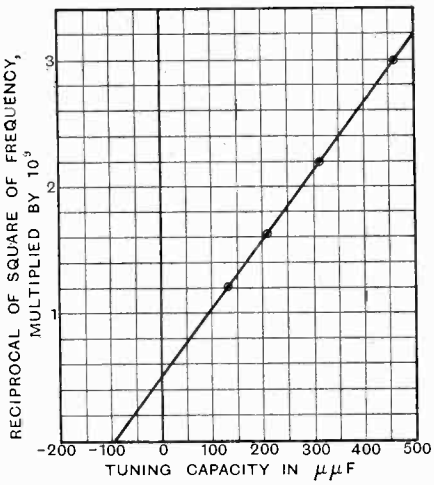


Fig. 5.

against capacity in the manner already familiar in connection with similar measurements at radio-frequencies. The frequencies can conveniently be determined by identifying the harmonic with which circuit 3 is heterodyning and measuring the radio-frequency of circuit 3, the radio-frequency wavemeter being loosely coupled to the coil of circuit 3 and adjusted by the double beat method. It will, of course, be necessary to correct for the audio-frequency difference in this case, so that the audio-frequency of circuit 4 must be known (*e.g.*, by reference to a tuning fork). Thus if the $n$th harmonic of circuit 2 is being observed and the fundamental frequency of circuit 3 ($f_3$) is $f_a$ cycles above this $n$th harmonic, then $f_2$, the frequency of circuit 2, is given by

$$f_3 = nf_2 + f_a$$

or

$$f_2 = \frac{f_3 - f_a}{n}$$

The points actually obtained in one such measurement are shown in the curve of Fig. 5. The value for $L$ obtained in this way was 135.5 mH. The same coil was measured on an audio-frequency bridge and the value found for zero frequency (by extrapolation from 1,000 and 2,000 cycles) was 135.2 mH. It was found possible to make the same measurement with a coil of 4 henries inductance, using the 6th harmonic for observation of the resonance point. It was simpler in this case to identify the harmonic used for observation by setting the frequency of circuit 2 to exactly 4,000 cycles (by beats with a known fork) and measuring the corresponding frequency of circuit 3 with a wavemeter.

For coils above a few henries in inductance the method requires some skill in operation owing to the superposition of the audio-frequency of circuit 2 on the two other audio-frequencies involved. For coils up to a henry or so the method is comparatively simple to operate and gives repetition to better than 1 per cent.

## 5. Measurement of Capacity at Audio-frequencies by Substitution.

The effect described in section 4 is not confined to radio-frequencies and is, therefore, in theory available for similar measurements at audio-frequencies, the heterodyne stage being of course no longer necessary under these conditions. The effect can, in fact, be observed, but the sensitivity of the resonance adjustment by these means is so very much lower that the method is hardly to be recommended for use in this way. The apparatus is, however, so conveniently applicable for measurements of capacity at audio-frequencies by direct substitution that some practical notes on this are included, although it is not actually a double beat method.

The first radio-frequency oscillator is dispensed with, and the second is fitted with a suitable audio-frequency coil, and tuned to the desired audio-frequency by means of condensers of known capacity. The wave form can be made fairly pure if desired by means of the control-grid bias of the screen-grid valve, this being brought to such a value that oscillation is only just sustained—or an even better alternative is to put the control grid at, say, $-2$ and then load the oscillating coil with resistance until oscillation is only just sustained. The control grid of the output stage of the unit is now given an initial grid bias so negative that

only the crests of the alternating voltages are effective in producing anode current. This, without causing any appreciable distortion of the wave form of the measurement circuit, results in a very distorted wave form in the output stage, in which the fundamental is practically suppressed and only higher harmonics are present. The audio-frequency reference oscillator can now be synchronised with some suitable harmonic of this distorted wave form, by elimination of beats. The capacity to be measured is connected in parallel with the known capacities tuning the second oscillator, which capacities are varied so as to restore the frequency to its original value by once more eliminating beats with the audio-frequency reference oscillator.

The above device for enabling a pure wave form in the measurement circuit to produce a very distorted wave form in an output stage for frequency supervision results in a very high sensitivity. A sensitivity of parts in a hundred thousand is easily obtained in this way. Capacities up to tenths of microfarads can be measured directly by parallel substitution. Larger capacities will generally have to be inserted in series owing to the difficulty of maintaining oscillation with large capacities in parallel. In such cases the sensitivity of the synchronisation adjustment is of particular value. As a simple laboratory way of measuring capacity the method is thus very elastic both as to capacity range and frequency range.

This work was carried out in connection with the programme of the Radio Research Board, and is published by permission of the Department of Scientific and Industrial Research.

## Appendix I.

1.—*Simple theory of resonance detection by the double beat method, neglecting resistance effects.*

Referring to Fig. 2, it will first be assumed that the angular frequency $\omega$ of circuit 2 is determined by the reactance of the oscillating circuit, and that any change in the effective reactance of the circuit caused by the coupling to circuit 1 will be accompanied by a change in $\omega$. If $X_1$ be the reactance of circuit 1, and $M$ the mutual inductance between circuits 1 and 2, the reactance of circuit 2 is decreased by an amount

$$\frac{M^2\omega^2}{R_1^2 + X_1^2} X_1$$

when circuit 1 is closed.

The condition that $\delta\omega$ shall be zero is clearly

$$X_1 = \omega L_1 - \frac{1}{\omega C_1} = 0$$

2.—*More complete theory, taking account of resistance effects.*

The frequency of oscillation of circuit 2 can be regarded as a function of the inductance capacity and resistance of the oscillatory circuit. The effect of the coupling to circuit 1 can be represented as an increase of inductance $\delta L_2$ and an increase in resistance $\delta R_2$ where

$$\omega\delta L_2 = \frac{M^2\omega^2}{R_1^2 + X_1^2} X_1$$

and

$$\delta R_2 = \frac{M^2\omega^2}{R_1^2 + X_1^2} R_1$$

If the changes be sufficiently small to neglect second order differentials, the condition for undisturbed frequency in circuit 2 can be written

$$\delta\omega = \frac{\partial\omega}{\partial L_2}\delta L_2 + \frac{\partial\omega}{\partial R_2}\delta R_2 = 0$$

and with the above values of $\delta L_2$ and $\delta R_2$ this becomes

$$X_1 = \omega R_1 \frac{\partial\omega}{\partial R_2} \Big/ \frac{\partial\omega}{\partial L_2}$$

The coefficient $\partial\omega/\partial L_2$ will not differ appreciably from $-\omega/2L_2$, so that

$$X_1 = -2L_2R_1\frac{\partial\omega}{\partial R_2}$$

and if $C_1'$ be the corresponding value of $C_1$

$$\omega L_1 - \frac{1}{\omega C_1'} = -2L_2R_1\frac{\partial\omega}{\partial R_2}$$

The true resonance value is $C_1$ where

$$\omega L_1 - \frac{1}{\omega C_1} = 0.$$

Therefore

$$\frac{1}{C_1} - \frac{1}{C_1'} = 2\omega L_2 R_1 \frac{\partial\omega}{R_2}$$

which is, very approximately, putting $\omega L_2 = 1/\omega C_2$

$$\frac{\delta C_1}{C_1} = 2\left(\frac{C_1}{C_2}\right) R_1 \frac{1}{\omega}\frac{\partial\omega}{\partial R_2}$$

Using the same symbols, the error due to the same cause when a maximum current resonance indicator is used can be calculated.

The resistance coupled into circuit 2 when circuit 1 is tuned for maximum current will be very approximately $M^2\omega^2/R_1$. The frequency change in circuit 2 will therefore be

$$\delta\omega = \frac{M^2\omega^2}{R_1}\cdot\frac{\partial\omega}{\partial R_2}$$

and the error, in the value of $C_1$ is thus given by

$$\frac{\delta C_1}{C_1} = \frac{2\delta\omega}{\omega} = 2\frac{M^2\omega^2}{R_1}\cdot\frac{1}{\omega}\frac{\partial\omega}{\partial R_2}$$

# A Direct Reading Modulation Meter.*

*By A. H. Cooper, B.Sc., and G. P. Smith.*

*(The Gramophone Co., Ltd.—His Master's Voice.)*

IN January of this year it was found necessary to develop a simple absolute modulation meter, in connection with work on linearity of detectors. The instrument here described does not require calibration from an oscillograph or other apparatus, and, besides its original intention, is in use for measuring the modulation of standard signal generators, and, by the use of a good radio-frequency amplifier, of the modulation of broadcast transmissions, and no unexpected effects have occurred in the several meters we have made.

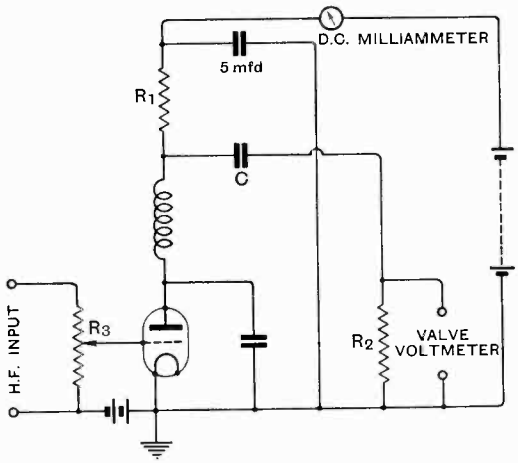


*Circuit of the modulation meter.*

The modulated input is applied through a potentiometer to the grid of a valve (an H.L. 210 Marconi) arranged as an anode bend detector. An H.F. choke and by-pass condenser remove H.F. currents from the anode circuit so that the currents in the rest of the circuit are steady D.C. (measured on a D.C. milliammeter) and an A.C. component, which is passed on to the valve voltmeter by the resistance capacity coupling $R_1C$ and $R$. In practice, by making $C$ about 5 microfarads and $R_2$ about 10 times $R_1$, the frequency characteristic of this device may be ignored.

If the valve is arranged to work on a substantially parabolic part of its characteristic, then the E.M.F. measured by the valve voltmeter can be shown to be :

$$\frac{4R_1(I - I_0)K}{2 + K^2}\sqrt{1 + \frac{K^2}{16}}$$

where $I_0$ is the steady anode current, with no input, $I$ the same with input, and $K$ the fractional modulation. Thus by inserting the value of $K$ for predetermined values of $R_1$, $I$ and $I_0$, a table of corresponding values of the E.M.F. can be made. This correlates the modulation fraction with the valve voltmeter reading.

These values of $R_1$, $I$ and $I$ are determined by the efficiency and rectification considerations of the valve. Using a Marconi H.L.210, a convenient value of $R_1$ is 10,000 ohms and $R_2$, 100,000 ohms and the curve of the valve will be substantially parabolic with 100 volts H.T. $4\frac{1}{2}$ volts G.B. and $I - I_0$ not more than 0.5 m.a. Given these supply voltages which determine $I_0$ the value of $I$ can be adjusted by means of the potentiometer $R_3$ and the percentage modulation obtained from the valve voltmeter, reading from the above-mentioned table.

It is hoped to be able to publish at a later date some interesting data obtained of the variations in modulation of various broadcast transmitters, and also of the various effects on modulation encountered during periods of fading.

* MS. received by the Editor, Nov. 6th, 1931.

# Quality Detectors: *

## A Survey of Rectification.

*By W. Greenwood, B.Sc., A.M.I.E.E., and S. J. Preston, B.A.*

(*Research Department, British Broadcasting Corporation.*)

IN the past broadcasting transmitters have not employed sufficiently heavy modulation to show up to any really appreciable extent the defects of imperfect rectifiers used in wireless receivers. Now that all modern transmitters have provision for 100% modulation, it has become important that detectors should be capable of handling signals modulated to this extent without introducing any appreciable distortion.

The object of this article is to indicate how the various practical methods of rectification can be used to give the best quality, according to the conclusions which have been arrived at as the result of work carried out on this subject during the last few years.

### The Perfect Rectifier.

In order that the rectified output voltage or current shall be a true copy of the changes in amplitude of the modulated carrier, and

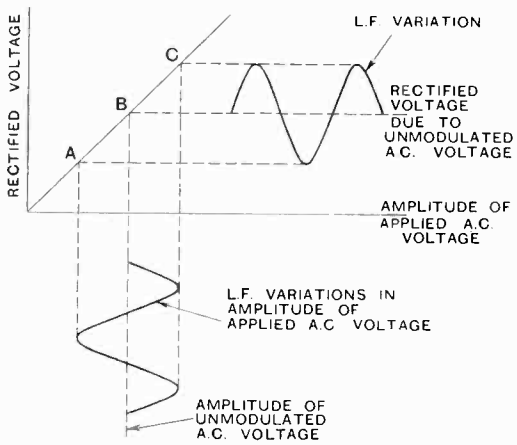


Fig. 1.—*Modulated carrier applied to a perfect rectifier.*

therefore of the original modulation, the dynamic characteristic must be a straight line between the limits within which the amplitude of the modulated carrier and the corresponding rectified output swing (Fig. 1). Curvature outside these limits does not matter. For 100% modulation, however, the characteristic must be straight from zero to twice the value of the unmodulated carrier if amplitude distortion is to be avoided.

A perfect rectifier would have infinite resistance to an applied voltage in one direction, and would have no resistance to applied voltages of the opposite sense. Its static or D.C. characteristic would therefore consist of the $X$ axis to the left of the origin and the $Y$ axis above the origin (Fig. 2).

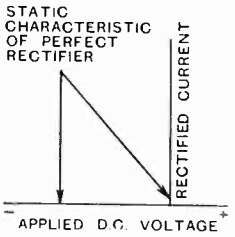


Fig. 2.—*Static characteristic of a perfect rectifier.*

A unidirectional voltage would be developed across a resistance connected in series with it and a source of alternating voltage, and its value at any instant would be equal to the instantaneous value of the applied A.C. voltage during the half-cycles when current flowed. Any low frequency variation in the amplitude of the applied A.C. voltage would therefore occur in the unidirectional voltage developed across the resistance. Any apparatus which would respond to such low frequencies would therefore record their presence when connected across the resistance. A D.C. voltmeter would read the mean voltage, and the needle would also respond to the L.F. variations if they were sufficiently low in frequency for the needle to respond. The high frequency variations in the applied voltage would still flow through the apparatus, but would have no effect on it if it were arranged to have no response to anything but audio frequencies. Thus, contrary to widespread belief, a condenser across the resistance is not necessary for the process of rectification, although it may be desirable for other reasons.

The dynamic characteristic of such a

* MS. received by the Editor, April, 1931.

perfect rectifier with a series resistance as part of the device would be a straight line for all frequencies if the resistance had constant value at all frequencies.

## Imperfect Rectifiers.

Unfortunately it has not yet been possible to find any rectifier which has infinite resistance to voltages in one direction and no resistance to voltages in the opposite direction. The resistance may be less than infinity in one direction and considerably greater than nothing in the other direction, and the static characteristic of such a rectifier is shown in Fig. 5. The resistance of the rectifier itself depends on the applied voltage for both positive and negative values, and is equal to the voltage divided by the current at any given voltage. The differential or A.C. resistance is equal to the reciprocal of the slope of the curve for small changes about the given applied voltage. Hence the voltage applied to the rectifier when a resistance or impedance is connected in series with it will depend on the relative values of such resistance or impedance and the resistance of the rectifier, and the dynamic characteristic obtained, will depend on these values also. (Fig. 4.)

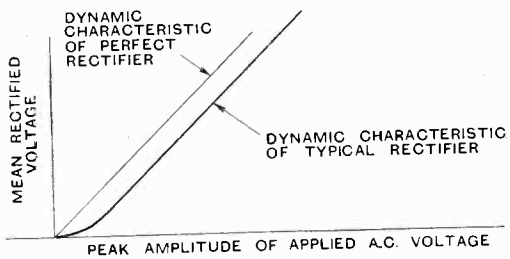


Fig. 3.—*Dynamic characteristics of perfect and typical rectifiers.*

If the series resistance can be made so large that the resistance of the rectifier is negligible at all positive inputs compared with it and extremely large at negative inputs compared with it, then the conditions are similar to those of a perfect rectifier.

By arranging the operating conditions of most rectifiers used in practice, it is usually possible to obtain a static characteristic over the range required of the nature shown in Fig. 6. This is done by applying a steady biasing voltage to move the working zero to a point where the resistance in a negative direction is sufficiently large to be regarded as infinity, and the resistance in the positive direction is reasonably low at all but very small inputs.

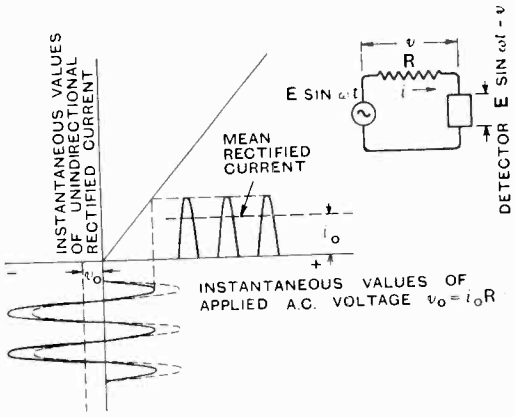


Fig. 4.—*Illustrating effect of load resistance on voltage applied to detector.*

The effect of the high resistance at very low inputs is to cause a bend at the bottom of the dynamic characteristic (Fig. 3), and the smaller the value of the load resistance compared with the detector resistance at these small inputs the greater will be the extent of this bend. In other words, the efficiency of the rectifier is less at low inputs than at high ones, owing to the high resistance of the rectifier causing appreciable drop of rectified volts across it, thus reducing the rectified voltage across the load resistance. Provided the resistance of the rectifier does not begin to increase again at very high inputs (which would be shown by the static characteristic becoming less steep) the dynamic characteristic will continue straight indefinitely after the initial bend at low inputs. Hence, the rectifier will be more nearly perfect the greater the input, as the small bend at low inputs will become relatively less important.

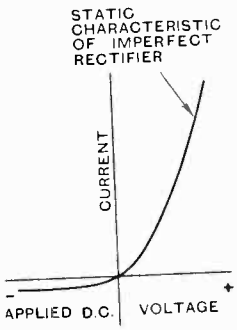


Fig. 5.—*Static characteristic of imperfect rectifier.*

Thus it will be seen that a rectifier with an imperfect static characteristic can be made to approach an ideal rectifier by employing a load resistance whose value is high com-

pared with the resistance of the rectifier at very low inputs, thus obtaining a linear dynamic characteristic except at very small inputs, and that the effect of this initial curvature can be minimised by working at large inputs.

### Effect of Capacity Across the Load Resistance.

It is usual to connect a condenser across the output resistance of a rectifier although, as already stated, it is not essential for the

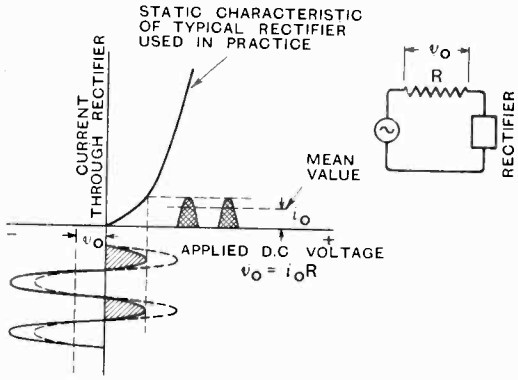


Fig. 6.—*Effect of load resistance on typical rectifier.*

process of rectification. If, however, the output resistance is connected across the rectifier as shown in Fig. 8, as is often done, a blocking condenser is necessary if a rectified voltage is to be developed across this load resistance, otherwise the resistance would be short-circuited by the input circuit. When the resistance is in series with the supply and the rectifier (Fig. 7), the efficiency of an imperfect rectifier is increased by connecting a condenser across the resistance as the voltage applied to the detector is thereby increased and its resistance consequently decreased. The condenser in both cases prevents high frequency voltages being set up across the load resistance if the reactance of the condenser at those frequencies is low compared with the resistance.

The condenser has another important effect which is not an advantage. When a modulated carrier is rectified the low frequency changes in amplitude of the modulated carrier appear in the rectified output, and if these do not produce corresponding currents or voltages then frequency distortion will occur. Hence the impedance of the circuit through which the rectified output flows should be constant at all the frequencies to be reproduced. Thus the value of the condenser employed, together with any stray capacities which may be present, must not be so large that its reactance at the higher audio frequencies is such as to reduce the impedance of the resistance and condenser in parallel. At the same time, however, it should have sufficiently low reactance at the frequency of the carrier, compared with the resistance, to allow the applied H.F. voltage to be fed to the rectifier. Thus the reactance of the condenser at the carrier frequency should be small compared with both the load resistance and the rectifier resistance.

In order that the output over a frequency range of 0 to 10,000 cycles per second should be sensibly constant the product of the resistance (megohms) and the total capacity (microfarads) in parallel with it should not exceed $10^{-5}$.

Unless the load impedance can be kept constant over the required frequency range, frequency distortion will occur, and a pure resistance is to be preferred to chokes and transformers unless suitable precautions are taken.

### Practical Types of Detectors.

The principles of rectification already discussed apply to all forms of detectors. In practice it is necessary to find how the

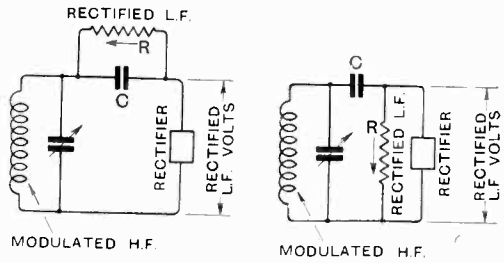


Fig. 7. Fig. 8.
*Alternative circuits for rectification.*

different methods can be utilised to obtain the best results, and to see which method or methods can be made to approach most nearly to the perfect rectifier.

The load thrown by the detector on to the supply circuit has also to be taken into consideration, as well as the sensitivity of

the method and the suitability of the best working input for the input available.

*The Crystal Detector.* The crystal detector is one of the oldest forms of rectification and the best known. It has also obtained a high

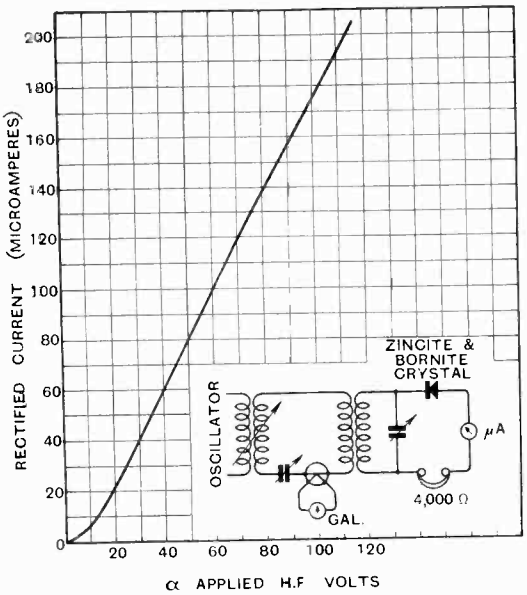


Fig. 9.—*Typical dynamic characteristic of crystal detector.*

reputation for quality, although at the present time there is not quite so much heard of this property as there used to be. For comparison purposes a dynamic characteristic of a Zincite-Bornite combination is shown in Fig. 9. This is not a bad characteristic, and, provided the correct conditions are maintained, results are very good.

In practice, however, the characteristic is liable to vary considerably with the adjustment of the crystal and, in general, appreciable distortion is experienced on heavy modulation. Forms of valve detection described later will be seen to be capable of considerably better quality.

*The Diode Detector.* A two electrode valve has the "one way" conduction property which is required for rectification. The electrons emitted by the hot filament can only travel to the anode if its potential with regard to the filament is positive, so that current can only flow from anode to filament.

The static characteristic of the diode shows a gradual initial bend owing to the limitation of anode current by the space charge effect for small applied anode voltages. This undesirable feature can be to a large extent removed by using a triode, the grid of which is maintained at a positive potential with regard to the filament to neutralise the space charge. This straightens up the static characteristic, and at the same time greatly reduces the internal resistance of the anode filament path, so that very satisfactory results may be obtained with an output resistance of 10,000 ohms when the polarising potential on the grid is + 22 volts.*

Applying the condition mentioned previously, this allows *C* to have a value of 0.001 mfd., and the circuit of Fig. 10 was found to introduce no appreciable frequency distortion and to give the dynamic rectification characteristic shown. This characteristic was taken with the circuit shown in the figure, a thermojunction measuring the H.F. current flowing into the primary of a fixed mutual inductance and a galvanometer

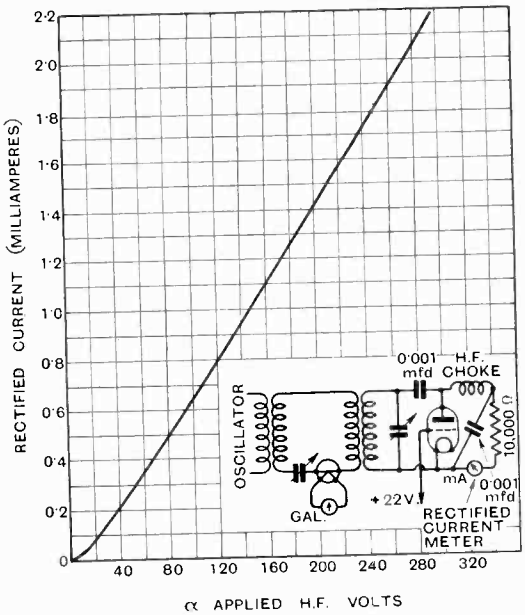


Fig. 10.—*Typical dynamic characteristic of a "Kirkifier."*

reading the rectified current flowing through the output resistance. If the H.F. carrier is caused to give a rectified current of at least

* A rectifier of this type is often referred to as a "Kirkifier."

1 mA., then this detector will introduce no appreciable amplitude or frequency distortion at 100% modulation, though the dynamic characteristic is not completely linear at low inputs and some distortion

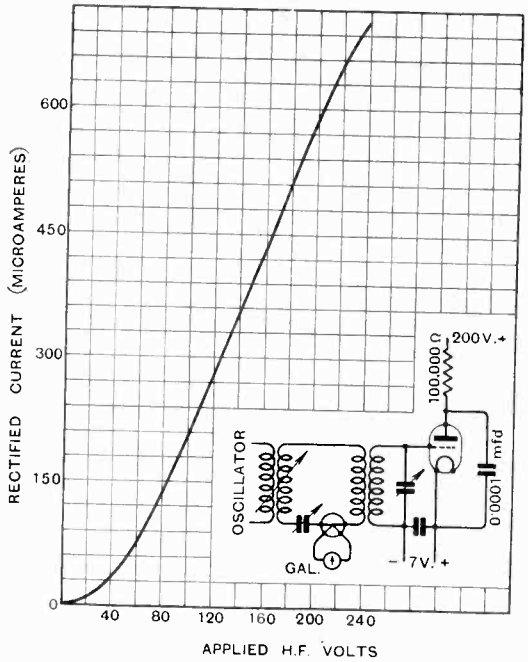


Fig. 11.—*Typical dynamic characteristic of an anode bend detector.*

must occur. This form of rectifier has the disadvantage that it imposes a very heavy damping on its associated circuit, and at broadcast frequencies this may be equivalent to a parallel resistance of as low as 8000 ohms. Neither is it sensitive, for it operates solely as a rectifier, and there is no simultaneous amplification as in other valve detectors. By using higher values of output resistance and correspondingly lower values of capacity the damping effect can be reduced considerably, and the linearity improved, although the latter is sufficiently good for most practical purposes.

*The Anode Bend Detector.* In the anode bend detector the rectifying agency is the anode to filament resistance of a triode, but the action differs from the diode detector described above in that the H.F. voltages are not applied between anode and filament, but between grid and filament, so that a stage of H.F. amplification occurs before the rectification takes place in the anode circuit. Negative bias is applied to the grid so that the working point is on the lower bend of the anode current/anode volts characteristic. The H.F. voltages applied to the grid must not cause grid current to flow, for this will introduce damping and reduce the overall H.F. amplification at large amplitudes and so set up amplitude distortion. A typical circuit for anode bend detection is shown in Fig. 11, which should be compared with Fig. 7, when it will be seen that the two circuits are precisely similar in principle. Under these working conditions the valve has a high impedance, and $R$ is therefore made large (100,000 ohms). Consequently, $C$ cannot be increased beyond 0.0001 mfd. if the upper modulation frequencies are to be preserved. An experimental dynamic characteristic is also shown in Fig. 11. It will be seen that the initial bend is rather

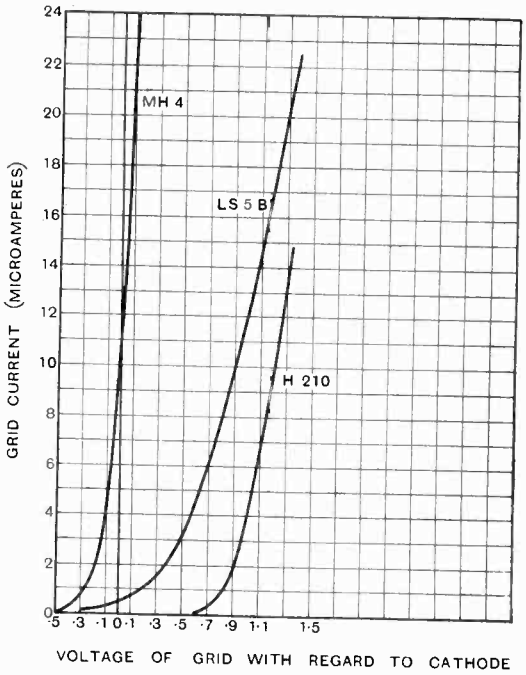


Fig. 12.—*Typical static characteristics of grid detectors.*

marked and the subsequent range of linearity is not sufficient to make this unimportant, as the commencement of grid current sets an upper limit to linearity. It is clearly desirable to work this detector almost up

to the point of grid current on full modulation, but even under these conditions there is likely to be appreciable amplitude distortion for modulation greater than 50%. For small inputs amplitude distortion will be serious, because the whole of the working range on the dynamic characteristic will be non-linear. This type of detector has the advantage of very low damping, equivalent to about 200,000 ohms parallel resistance at broadcast frequencies, and is very sensitive to signals which load it to full capacity.

*The Grid Current Detector.* It should be remarked at once that this form of rectification, which is popularly called "grid leak," is not different in principle from any other form of detection. In fact, the only difference lies in the nature of the rectifying path, which happens to be the grid to filament resistance of a triode, the anode circuit being used as an amplifier of the rectified signal so that the valve acts as a combined detector and low frequency amplifier. Typical static curves showing the relation between applied voltage and grid current for different valves are given in Fig. 12, and it will be noticed that they have a sharp initial bend followed by a long range of linearity. It appears, therefore, that the grid current detector will have a linear dynamic characteristic and good sensitivity, owing to the steepness of the static characteristic. In order to make the valve act as its own L.F. amplifier, the rectified voltages must be applied between grid and filament, and this may be accomplished by the circuits of Fig. 13, which should be compared with Figs. 7 and 8. The provision for biasing is included to allow an adjustment to obtain the best condition on the static characteristic, and it is found in general that a positive bias equal to the filament voltage is sufficient, so that the "grid leak" $R$ may be returned to positive filament. The grid filament resistance of a valve is usually rather high, and it is desirable that the output resistance —*i.e.*, grid leak—should be as high as is permissible. The capacity $C$ cannot be less than about 0.0001 mfd. if full use is to be made of the applied H.F. voltages, so that the grid leak should not be higher than 100,000 ohms if the product of resistance (megohms) and total capacity (microfarads) is not to exceed the value of $10^{-5}$ necessary to reproduce faithfully the upper modulation frequencies. It has previously been pointed out that for a linear dynamic rectification characteristic the rectifier should work into a resistance much higher than its own resistance at very small inputs in the conducting direction. Now the mean resistance of the grid to filament path, even at large

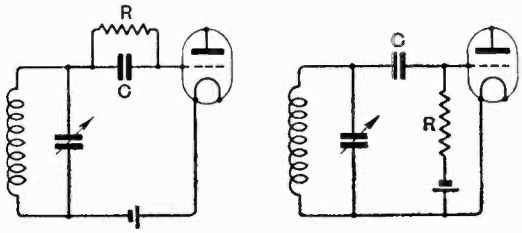


Fig. 13.—*Alternative circuits for grid rectification.*

inputs, of a 6-volt valve may be 50,000 ohms, and the dynamic characteristic of such a valve with 100,000 ohms leak is curved since the grid leak is not sufficiently high compared with the resistance at very small inputs, which is considerably greater than 50,000 ohms. However, 2-volt valves have a corresponding resistance of the order of 25,000 ohms at large inputs, and with indirectly heated valves this is reduced to 7500 ohms, or even less with modern valves. The reason for these differences is that the applied H.F. voltages under working conditions are usually of the order of 2 or 3 volts, which means that the grid will only be positive to one-half of a 6-volt filament, and grid current will not flow from the whole of the filament. If this voltage drop in the filament is reduced or eliminated, the grid can draw electrons from a greater emitting surface, and the grid filament resistance decreases. It is possible to use 100,000-ohm leaks with 2-volt valves or indirectly heated valves, and excellent characteristics are obtainable, as is indicated by Fig. 14, which exhibits the relation between rectified grid current and peak applied H.F. voltage. The linear portion of the curve continues indefinitely, but unfortunately it is not possible to take full advantage of this excellent characteristic when the valve is also used as an amplifier of the rectified voltages, because the valve cannot handle a very large voltage swing on the grid without distortion. Grid current must be regarded as flowing from grid to

filament, and therefore from the filament down the leak to the grid to complete the circuit. Thus grid current impresses a negative voltage on the grid, and the voltages due to rectification make the grid negative with regard to the filament. The applied H.F. voltage is also developed between grid and filament, and the overall effect is approximately that the grid voltage swings between 0 and $-2E$, $E$ being the peak applied H.F. voltage. This means that if too large a signal is applied to a grid current detector, the straight portion of the grid volts-anode current curve is exceeded with the introduction of anode bend rectification, which is in the opposite sense. This effect is clearly seen in Fig. 14 (dotted line) which represents the change in anode current, suitably scaled, of such a detector plotted against applied H.F. voltage. The maximum permissible H.F. input is therefore approximately equal to the correct grid bias for the valve used as a first-class amplifier. Usually the grid current detector valve will be arranged to give a rectified voltage output to a succeeding valve, and there will be an impedance in its anode circuit. If a resistance

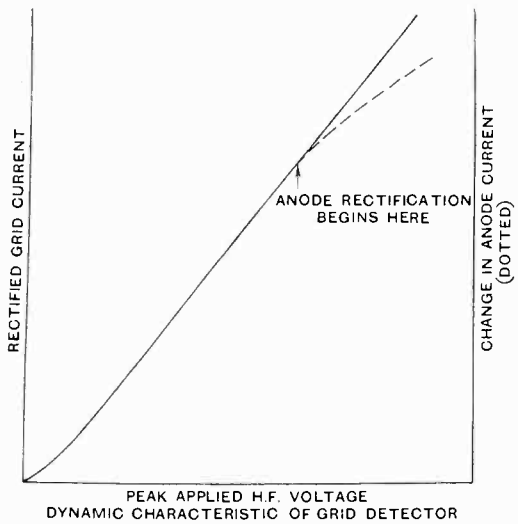


Fig. 14.—*Change in anode current shown plotted against applied H.F. voltage.*

is used the anode voltage should be sufficiently high to ensure that the maximum permissible voltage is actually applied to the anode, this being the condition for the best performance as an amplifier. A circuit which has been found satisfactory is shown in Fig. 15, and it has been found experimentally that, in general, the H.F. input for best operation should give a rectified current

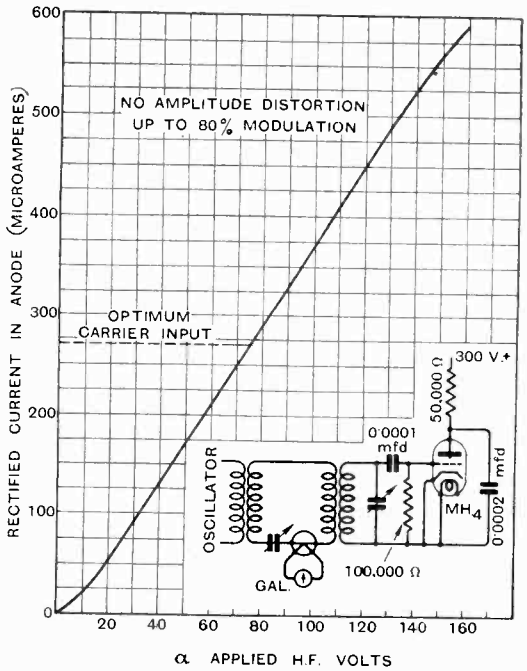


Fig. 15.—*Typical dynamic characteristic of grid detector.*

equal to about $\frac{1}{10}$th of the steady anode current with no applied signal. The "H" class of valve gives excellent results with an anode resistance of 50,000 ohms and 300 volts H.T., and with an H.F. carrier input of 2 volts R.M.S. will give a rectified output voltage on 100% modulation of about 10 volts. For choke or transformer output the H.T. voltage should be the maximum rating for the valve. There does not appear to be any great advantage in using so-called "power rectification" with valves of low amplification. Considerable high frequency amplification is necessary in front of such a "power detector," and there is less L.F. amplification in the valve itself than in the case of a valve with greater amplification. The low amplification valve with its low impedance also takes considerable anode current, and low values of anode resistance must be used if the necessary volts are to be maintained on the anode. The resulting dynamic characteristic is no better than

with higher impedance valves, and the maximum undistorted voltage output is more or less the same in both cases.

A grid current detector worked under the above conditions is sensitive and capable of excellent results, and will handle 80% modulation without any distortion when worked with the correct input (Fig. 15) and 100% without appreciable distortion. Although there is naturally more amplitude distortion with weaker inputs, yet the overall performance appears to be greatly superior to that of any other known detector.

It is important that the H.F. input should just load the detector to its limit, for if this be not so the full advantage of the linear range of the rectification characteristic will not be obtained, and appreciable distortion may occur on the initial bend if this is an appreciable proportion of the total working range.

Used according to the above principles, the detector has only one serious disadvantage. It causes a damping on the tuned grid circuit which may be equivalent to a parallel resistance of as low as 10,000 ohms. When this damping is analysed, it is found to be due to three causes. First, the grid leak is effectively across the circuit, and acts as a shunt resistance. Secondly, the conducting path from grid to filament is also across the circuit, and this may cause very severe damping when a low value of grid leak is used, since in this case considerable standing grid current may be flowing and the grid-filament path will have low resistance. The main cause of the damping due to grid current detectors using fairly high values of grid leak does not appear to have been generally appreciated. It is due to the load thrown back from the anode circuit. The amplified H.F. currents appearing in the anode circuit set up voltages across any impedance, such as a by-pass condenser, and these voltages return to the grid circuit via the anode grid capacity to set up anti-reaction. Under quite normal conditions this may impose a damping of 30,000 ohms on the tuned circuit, and is by far the most important factor in the case of the grid current detector using fairly high values of grid leak, the damping due to grid current only becoming comparable when the grid leak is reduced appreciably below a megohm. It is interesting to note that the reason for the small damping of the anode bend detector is due to the fact that the valve is being operated in a condition of higher impedance and lower amplification owing to the negative grid bias, so that the H.F. voltages set up across the same anode impedance as in the case of a similar valve used as a grid current detector will be smaller, and consequently the referred load less. It is possible to remove this load by neutralisation, but the general expedient is to use reaction, although this has not been found to lead to good quality when low resistance grid leaks are employed.

### Push-pull Grid Rectification.

There is, however, another way of overcoming this inherent disadvantage, and this method makes use of the push-pull principle and uses two valves. The circuit is shown in Fig. 16. It will be seen that provided the valves are not overloaded there will be no H.F. current in the common anode circuit, since the currents in each anode circuit due to the applied H.F. voltages are equal and opposite. There is no H.F. voltage developed

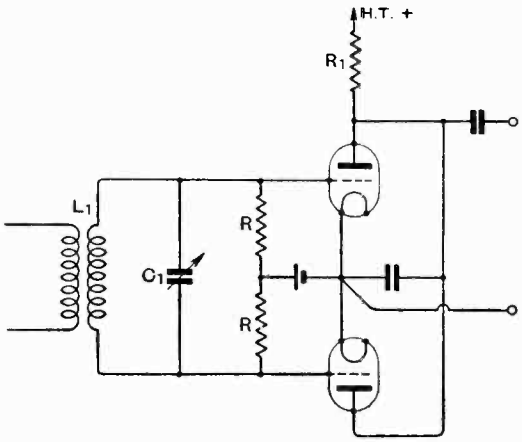


Fig. 16.—*Circuit for push-pull grid rectification.*

in the anode circuit and no referred load, so that the circuit $L_1C_1$ has no damping due to anti-reaction. As regards the rectified voltages, the two valves are in parallel, and amplified voltages will appear across the resistance $R_1$. It should further be noticed that no blocking condensers are required in this arrangement, since the tuned circuit cannot act as a short circuit to the grid leak $R$, because it is now in series with another equal resistance, and the voltages set up

across this latter resistance are utilised by the other valve. The value of $R$ may be as high as the shunting capacities will permit, and as the capacity of an average valve and holder under these conditions is of the order of 20 micro-microfarads, the grid leak may be increased to 0.5 megohm. Even so, it is still desirable to use 2-volt or indirectly heated valves for best results. The damping due to grid current with this increased grid

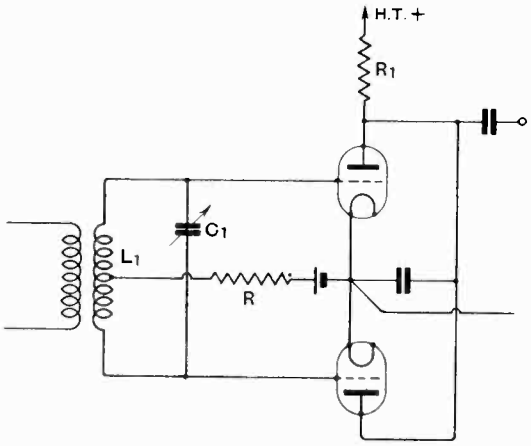


Fig. 17.—*Alternative arrangement for push-pull grid rectification.*

leak is quite small, and the overall damping due to a detector as described above varies between 100,000 and 150,000 ohms at broadcast frequencies. There is very little residual H.F. in the anode circuit, and a small by-pass condenser across the anode resistance is quite sufficient to filter the output completely. A variation of the same circuit is shown in Fig. 17. Since the capacities of both valve-holders are across the grid leak it is reduced to 0.25 megohm.

The detector should be operated in the same way as a single valve grid current detector, with the maximum H.T. voltage and similar valves and half the anode impedance, since the effective valve impedance is halved. The dynamic rectification characteristic is similar in form to that of a single valve grid current detector previously discussed, and the damping is now reduced to the same order as that due to an anode bend detector. It should be noticed that the H.F. voltages must be applied to the circuit $L_1C_1$ by means of a coupling coil, otherwise balance will be lost and the grid leak effectively shorted.

If no particular care is taken to ensure that the valves are accurately matched, and that the total stray capacity across each grid and filament is the same in each case, it has been found that if the input is arranged to give a depression in the total anode current of about 1/20 instead of the 1/10 for a single detector, the improvement in all round performance over the single valve is appreciable. If, however, care is taken to ensure that the total capacity to filament (*i.e.*, earth) is the same for each grid, thereby ensuring that the inputs are equal, results are considerably improved, and a reduction in total anode current of 1/10 corresponding to the single valve case can be obtained without audible distortion on 100% modulation. The figures given in the accompanying table apply to push-pull arrangements where no special precautions were taken. The figures for a balanced arrangement were found to be of the same order, and the damping was found to be largely controlled by the resistance of the valve-holders.

Where the very best possible results are desired all components in the two grid circuits should be symmetrically arranged and capacity to earth avoided as much as possible. The tuning condenser should also be of the symmetrical type, *i.e.*, it should have two sets of fixed vanes, one connected to each grid, with the moving vanes between them and not connected to anything. The tuning coil of course must not be directly connected to the preceding valve or the balance will be upset; electromagnetic coupling must be used therefore, and stray capacity coupling avoided as much as possible.

## Summary and Comparison of Different Detectors.

A table of practical data is given, and a figure of merit is assigned to each detector. This figure takes into account the effective damping due to the detector, and represents the rectified volts output per unit power input assuming a carrier 100% modulated.

Detectors fall into two classes, the amplifying detector typified by the grid current and anode bend, and the non-amplifying detector represented by the diode and crystal.

Amplifying detectors have upper and lower limits to their range of linearity, the lower initial bend being due to the poor

efficiency of rectification with small inputs, and the upper bend is caused by overloading the valve as an amplifier. Thus in the case of the grid current detector anode bend rectification takes place with too large an input, while with the anode bend, grid current flows and grid rectification occurs, and the H.F. amplification introduces amplitude distortion. The grid current detector has a small initial bend, and therefore has a wide range of linearity before the upper curvature commences. This means uniformly good sensitivity down to small H.F. amplitudes, and little distortion on high percentage modulation. The initial curve of the anode bend detection characteristic is relatively more pronounced, and it is therefore comparatively insensitive to weak signals and must be worked with a large input so that the working point shall be on the linear range. Even so, distortion will occur for heavy modulation when the working point moves to a non-linear portion of the characteristic. The anode bend detector is preferably arranged to work directly into the output stage, since with the large input required for best quality the output will be sufficient to overload a penultimate stage. A grid current detector will usually require one stage of L.F. before feeding the output valve. The sensitivity of these two types of detectors worked under optimum conditions is very similar.

The crystal does not appear to be a very high class detector for general use, saturation being liable to occur before the initial curvature of the characteristic has become negligible particularly if the crystal gets

COMPARISON OF TYPICAL DETECTORS.

| Type of Detector. | Equivalent Parallel Resistance $R$. | Input H.F. Volts for Optimum Performance as Linear Detector ($E_1$). | Output L.F. Volts for 100% Mod. ($E_2$). | Voltage Sensitivity $\frac{E_2}{E_1}$ | Fig. of Merit* $\frac{RE_2^2}{E_1^2} \times 10^{-6}$ |
|---|---|---|---|---|---|
| Grid Current Detector LS5B, grid leak 2 megohms, grid condenser 0.0001; H.T. 300 v. through 50,000 ohms .. | 30,000 | 1.5 | 15 | 10 | 3 |
| Ditto, with 100,000 ohms Leak .. .. | 10,000 | 2.85 | 15 | 5 | 0.25 |
| Anode Bend Detector LS5B, anode resistance 100,000 ohms. $V_g = -7$, H.T. + 200 v. .. .. .. .. | 200,000 | 3.0 | 25 | 8 | 13 |
| LS5B as "Kirkifier" (10,000 ohms output) grid bias + 22 v. .. .. | 8000 | 12.5 | 10 | 0.8 | 0.005 |
| Crystal Detector (Zincite-Bornite) working into 4000 ohms phones .. .. | 10,000 | 1.0 | 0.4 | 0.4 | 0.0016 |
| Two H.210's as push-pull Grid Current Detector; $E_g$ = 0.4 megohm, $R_p$ = 25,000 ohms, H.T. = + 300 v. .. .. | 150,000 | 1.25 | 10 | 8 | 10 |
| Two MH4's, as above .. .. .. | 100,000 | 1.1 | 12.5 | 11 | 12 |
| Two H.210's as push-pull Anode Bend Detector; H.T. = 300 v., $R_p$ = 100,000 ohms .. .. | 200,000 | 10 | 100 | 10 | 20 |

* The figure of merit is a measure of the rectified volts output for the same input power in each case.

out of adjustment. The ordinary valve diode with low impedance output load exhibits a curved characteristic due to the space charge limitation, and if this space charge be neutralised by a positive potential applied to the grid, the characteristic is considerably straightened, as has been shown. The upper limit of the rectification characteristic is in this case determined by the emission of the filament so that a very large input can be handled, and this type of rectifier fully loaded is probably the most linear available. Unfortunately, the power required for such an input is rarely practicable unless power rectification is definitely intended.

Excellent dynamic characteristics and considerably reduced damping can be obtained by working a diode into a high resistance such as 0.25 megohm without utilising positive bias on a third electrode, and a triode can be used satisfactorily as a diode by connecting the grid and anode together. No amplification is obtained, however, and the arrangement is really equivalent to a grid rectifier without utilising the amplification property of the valve. Amplification has to be carried out by using an additional valve, although this has the advantage of not having to handle H.F. as well as the rectified signals if the H.F. is filtered out immediately after the rectifier.

For practical purposes in general, therefore, a grid detector, which gives linear rectification with amplification, seems to be the most suitable, and provided proper precautions are taken, results can be appreciably improved by using the push-pull arrangement.

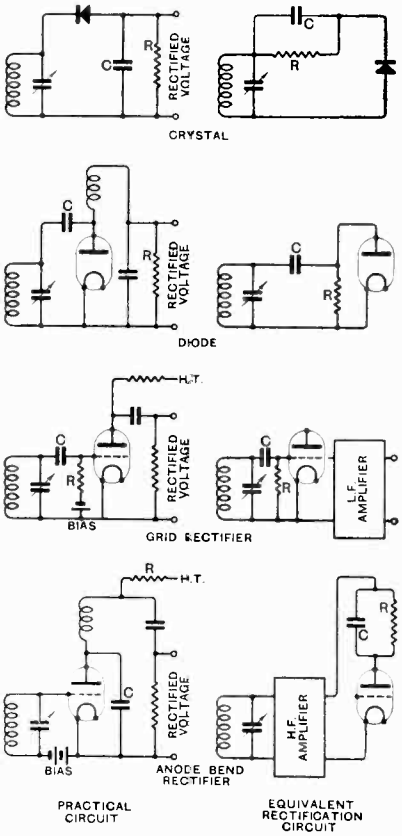


Fig. 18.—*Illustrating common principle of various types of rectifiers.*

# Books Received.

A Simultaneous Radiotelephone and Visual Range Beacon for the Airways.

By F. G. Kear and G. H. Wintermute (Bureau of Standards Research Paper, No. 341), describing the transmitting and receiving apparatus in a combined radiotelephone and visual range beacon system for aircraft in U.S.A. Pp. 27, with 24 illustrations and diagrams. Published by The National Bureau of Standards, Washington, D.C., U.S.A., price 20 cents.

Radio Construction and Repairing.

Including the Television Receiver by J. A. Moyer, S.B., A.M., and J. F. Wostrel (Third Edition). Advice and instruction in the equipment and maintenance of wireless receiving sets. Pp. 386 + ix, with 179 illustrations and diagrams. Published by McGraw-Hill Publishing Co., Ltd., London, price 15s. net.

Radio Receiving Tubes.

Including Applications for Distant Control of Industrial Processes and Precision Measurements, by J. A. Moyer, S.B., A.M., and J. F. Wostrel (Second Edition). The Construction, Action and Uses of Thermionic Valves, with the characteristics of the principal American valves. Pp. 323 + ix, with 203 illustrations and diagrams. Published by McGraw-Hill Publishing Co., Ltd., London, price 15s. net.

A Dictionary of Electrical Terms.

Including Telegraphy, Telephony and Wireless, by S. R. Roget, M.A., A.M.Inst.C.E., A.M.I.E.E. (Second Edition, revised and enlarged). A concise dictionary defining as briefly as possible the terms used in electrical work. Pp. 396 + vii. Published by Sir Isaac Pitman & Sons, Ltd., London. Price 7s. 6d.

# Frequency Measurement and Control.

## I.E.E. Wireless Section, Chairman's Address.

THE opening meeting of the I.E.E. Wireless Section session was held on Wednesday, 4th November, when the new chairman, Lt.-Col. A. S. Angwin, D.S.O., M.C., delivered his inaugural address. The new chairman is of the Engineer-in-Chief's Staff, G.P.O., and chose as his subject "Frequency Measurement and Control"—a matter in which his Office is naturally interested, both as a working department and as licensing and controlling authority.

The chairman, in opening, referred to early difficulties of transmission in getting sufficient strength of signal communicated against interference, particularly atmospherics. Valve developments, antenna design and selective circuits had all helped to reduce these difficulties and the main difficulty which still existed was that of interference from near frequencies. Problems of frequency-allocation still existed and the general result was the closing together of channels and minimising the width of frequency-band necessary. The total width of band necessary was represented by the sidebands plus a tolerance of frequency-wander. In long-wave working, the important point was the sideband width, but on short waves frequency-wander was the more serious problem and frequency-stabilisation was very necessary. The C.C.I.R. had made certain recommendations as to tolerances (0.1 per cent. being recommended), band-width and the minimising of non-essential emissions, all of which would have to be ratified at the next International Convention.

The lecturer then proceeded to describe the work of the Post Office on frequency checking, including observations made on their own and other transmitters in this country and on transmitters in other countries. The main frequency standardising equipment was at the P.O. Research Establishment at Dollis Hill, with a frequency-measuring station at Colney Heath, near the P.O. Receiving Station at St. Albans. The standard at Dollis Hill is a 1000-cycle fork, valve maintained, in a double oven with thermostatic control of the inner and intermediate chambers. The overall accuracy was of the order of 1 in one million. The accuracy of the fork was regularly checked by the phonic-motor method against standard time-signals sent out *via* Rugby.

The station at Colney Heath is substandard, the fork being valve maintained but not thermostatically controlled. It is, however, checked frequently against the fork at Dollis Hill. For checking the frequency of transmitting stations the fork is used in conjunction with a multivibrator, harmonics up to the 115th being chosen directly. Beyond this value a second multivibrator is maintained at the 20th harmonic of the first, and harmonics of it are selected for the higher frequencies. The method of reception was illustrated and described. Either multivibrator can be used according to the frequency to be measured, and the frequency of the station is interpolated on a special interpolating condenser between the two nearest harmonics of the multivibrator in use. The method of checking the Colney Heath fork against the Dollis Hill standard was also illustrated and described. This is done by telephone line, the Colney Heath fork being joined and working into its multivibrator in the normal manner of operation. The average error of Colney Heath was less than 10 in one million. This fork and the Dollis Hill standard fork were also checked systematically against the N.P.L. standard-frequency transmissions, the Dollis Hill fork agreeing to 1 in one million and the Colney Heath fork to 8 in one million.

In practice, it was considered preferable to check the frequency of transmissions by this measuring station rather than to attempt local control by wavemeter. Many observations were regularly made both on day-to-day stability of frequency and also on short-period variations. Several slides were shown illustrating results. Fork-controlled stations from 16 to 78.4 kc./s. were shown, giving frequency stability well within the required 0.1 per cent. A crystal-controlled station was next shown. This first revealed several irregularities, one taking it beyond the permitted tolerance, while the latter half of the graph showed the marked improvement effected by circuit modifications. Slides were also shown of a master-oscillator-controlled station and of a valve transmitter without master-control, the latter still being within the required 0.1 per cent.

The speaker then turned to the subject of crystal control. All the short-wave point-to-point services of the Post Office were controlled in this manner and the type of crystal used by the P.O. was capable of giving, with thermostatic control, a stability of $\pm$ 5 in one million. This type of crystal was illustrated and described. The crystals are 1 inch square, with rounded edges, 0.5 to 1.5 mm. thick, adjustment of frequency being made by micrometer control of the air-gap between the upper electrode and the top of the crystal. The circuit used is a tuned anode with the crystal joined from grid to filament. Comparisons of the performance of various crystals were shown in slides giving measured response-curves derived by an improved method of using the resonator crevasse. Following the crystal, stabilisation of the power amplification was of the greatest importance. Symmetrical push-pull systems were used for this purpose and the lecturer described a "heptode" valve designed for the purpose of push-pull power amplification. This has one filament, with two control grids and two anodes, while two other stabilising grids are suitably located and coupled back to the opposite anode for neutralisation. This had been much used and was highly successful.

The address concluded with a brief description of the new demountable valve which had been recently developed and was on view at the Faraday Exhibition in the Albert Hall. The construction of the valve was illustrated and described.

At the conclusion of his address, a vote of thanks to the new Chairman, moved by the Institution President Capt. J. M. Donaldson, M.C., was carried with acclamation.

# Correspondence.

*Letters of interest to experimenters are always welcome. In publishing such communications the Editors do not necessarily endorse any technical or general statements which they may contain.*

## Physical Reality of Side-bands.

*To the Editor, The Wireless Engineer.*

SIR,—In your Journal for January, 1931, there appeared an article by myself on "The Physical Reality of Side-bands." The issue for May, 1931, contained a valuable critical commentary on this article in the form of a letter from Mr. E. B. Moullin

In the article, I showed as a fact of experiment that, with large amplitude or linear rectification of a modulated wave received on a very selective circuit, the resonance curve of modulation frequency output voltage had three peaks corresponding to the three radio-frequency components of the modulated wave; and that the side peaks were actually taller than the centre peak. This last result I found rather surprising, and an apparently insuperable difficulty in the analysis prevented me from giving any theoretical explanation of it. This difficulty has since been overcome, or rather evaded, and I find that the result is quite in accord with theory. With linear rectification and a highly selective circuit (or, of course, with a large fractional modulation frequency), the height of the centre peak, in volts, will be approximately equal to the height of the side peaks multiplied by the modulation percentage.

This result is actually implicit in the formulae given by Moullin in the letter referred to above. Moullin states that the peaks will be equal, but it appears from the context that he is referring to the special case of 100% modulation.

This general result implies that, between certain limits of relative intensities in heterodyne reception, a larger output will be obtained with linear rectification when the set is tuned to the weaker of the two e.m.f.s.

One other point of importance arises from Moullin's letter. He shows that tuning to a side wave introduces a second harmonic component into the modulation wave form. This appears to be a particular case of a more general proposition that any process of reception which impairs the original phase and amplitude symmetry of the three components of a pure tone modulated wave will introduce, with linear rectification, not merely the second harmonic, but the full range of harmonics. This conclusion is foreshadowed in the Editorial of your issue for August, 1930. A full account of the wave form in the special case in which one side wave is suppressed altogether (*i.e.*, a heterodyne combination) is contained in a paper which you have accepted for publication.

F. M. COLEBROOK.

## Distortion in Valve Characteristics.

*To the Editor, The Wireless Engineer.*

SIR,—The article by Mr. G. S. C. Lucas in your issue for November is interesting, but he has (in lesser degree it is true) fallen into the very trap which his article purports to avoid.

He shows how a simple estimate of the second harmonic from measurements of extreme and central instantaneous currents fails if higher harmonics are present. But his own method fails if there are harmonics above the fourth.

I have found by bitter experience that the best way of treating this subject is to avoid short cuts and use the classical harmonic analysis. Looked at from this point of view, Mr. Lucas' method is a 4-ordinate scheme (4 measurements per half-cycle). Now in any such scheme the values found for any harmonic are actually the true values plus those of certain higher ones. Thus, if we represent the value of a harmonic simply by its number, we find that the following equations hold good for a 4-ordinate scheme:—

Apparent $0 = 0 + 8 + 16 + \ldots$
,, $1 = 1 + 7 + 9 + 15 + 17 + \ldots$
,, $2 = 2 + 6 + 10 + 14 + 18 + \ldots$
,, $3 = 3 + 5 + 11 + 13 + \ldots$
,, $4 = 4 + 12 + 20 + \ldots$

Now, if we consider other schemes, we get some interesting facts. First, a 2-ordinate scheme, using only the extreme and central currents, gives

Apparent $2 = 2 + 6 + 10 + \ldots$

or exactly the same accuracy as the suggested 4-ordinate scheme. Second, a 3-ordinate scheme gives

Apparent $3 = 3 + 9 + 15 + \ldots$

or *better* accuracy than the 4-ordinate one, for the 5th harmonic which enters into the former expression is often by no means negligible.

As far as my own experience has gone, the best result for combined accuracy and economy of labour is a 6-ordinate scheme which I have developed in a special manner. I regret that I have not yet succeeded in getting publication for the MS. of this, but the essence of it lies in arranging the work so as to exhibit *en route* the results of a 3-ordinate scheme. Now the results up to the third harmonic are as follows:—

| Ordinates. | Apparent. | is really |
|---|---|---|
| 3 | 0 | $0 + 6 + 12 + \ldots$ |
| 6 | 0 | $0 + 12 + \ldots$ |
| 3 | 1 | $1 + 5 + 7 + 11 + 13 + \ldots$ |
| 6 | 1 | $1 + 11 + 13 + \ldots$ |
| 3 | 2 | $2 + 4 + 8 + 10 + 14 + \ldots$ |
| 6 | 2 | $2 + 10 + 14 + \ldots$ |
| 3 | 3 | $3 + 9 + 15 + \ldots$ |
| 6 | 3 | same. |

Hence the differences in the results (and both appear in the working without extra labour) give useful information as to higher harmonics, without the work of analysing for them.

As an example, I have taken the following data,

which are as near as I can read from Fig. 5 of his article and I have analysed them in three ways: first, by a complete 12-ordinate scheme, which excludes errors from all harmonics below the 21st; next by my own simple method; and last by Mr. Lucas' method. The data are

| | | | | | | | |
|---|---|---|---|---|---|---|---|
| Grid Volts | 0 | .3 | 1.3 | 2.9 | 5 | 7.3 | 10 |
| Current .. | *12.5 | 12.45 | *12.3 | 11.9 | *10.9 | 9.1 | *5.9 |

| | | | | | | |
|---|---|---|---|---|---|---|
| Grid Volts | 12.7 | 15 | 17.1 | 18.6 | 19.6 | 20 |
| Current .. | 3.1 | *1.5 | 0.8 | *0.6 | 0.5 | *0.5 |

Of these, those underscored are used for Mr. Lucas' method, those starred for my simple method, and all for the most accurate scheme. Assuming a valve-curve such that the above data are *exactly* correct, the results are:—

| Harmonic. | Accurate. | Turner simple. | Lucas. |
|---|---|---|---|
| D.C. | 6.296 | 6.283 | 6.275 |
| Fund. | 6.967 | 6.948 | 6.925 |
| 2nd | 0.250 | 0.283 | 0.200 |
| 3rd | −1.175 | −1.133 | −1.850 |

The Lucas analysis gives the 4th harmonic directly as − 0.075. My method gives, as approximations: 4th, − 0.083; 5th, 0.185; 6th, negligible.

It will be seen that although in this case both the simple methods give a fair approximation, in neither case is one justified in assuming that they are really accurate: and it is by no means easy to estimate by looking at the curve whether the higher harmonics are or are not large enough to cause serious error.

The tables above, however, do give definite information as to the real composition of what one computes as individual harmonics.

Windsor. P. K. TURNER.

## Transients and Telephony.

*To the Editor, The Wireless Engineer.*

SIR,—If Mr. Thomas had desired to refer to the papers mentioned in my October letter, he could have added a footnote when correcting the proofs of his own paper in September.

His discovery that resonances of an M.C. speaker are due to a "room," is surely unique.

It is strange that in this country diaphragms of various shapes exhibit resonances in free air, in damped enclosures, in ordinary rooms and *in vacuo*. But then they were not "pistons."

N. W. MCLACHLAN.

## Modulated Dynatron Oscillators.

*To the Editor, The Wireless Engineer.*

SIR,—Mr. F. M. Colebrook, in his paper on the Dynatron oscillator, has introduced a very useful type of oscillator—one which has not received any publicity in this country before, and I wish to endorse his remarks as to the value of further research thereon. Some time ago I had occasion to investigate the properties of this type of oscillator, but unfortunately this work was rudely brought to a standstill, but not before its qualities had made themselves apparent.

The property which interested me in the final stages of the work was the ease with which such an oscillator could be modulated—simply by applying the modulation e.m.f. to the control grid. For example, if a phonograph pick-up be connected in the control grid circuit, excellent reproduction could be received on a local receiver; and, when used as a modulated wavemeter, excellent results were obtained. Unfortunately, however, a very scanty collection of quantitative data was collected.

Finally, as a beat frequency oscillator was required for other work, the dynatron unit received attention and the theoretical circuit devised was as shown below.

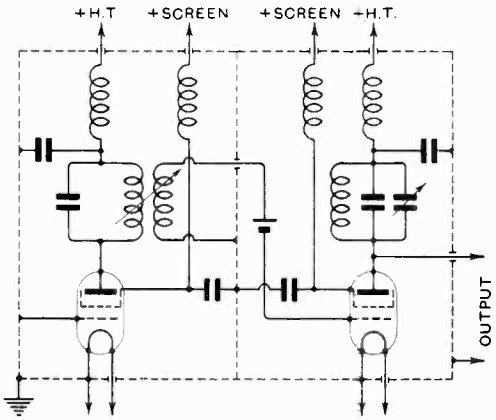


In this, two oscillators were employed: one oscillating at a fixed frequency and modulating the other which was capable of oscillating within 10 kc. of the former. The resultant beat frequency voltage was then rectified and amplified in the usual way. The two oscillators were elaborately screened, and no difficulty at low beat frequencies due to "pull in" was experienced. The output from the complete arrangement was uniform and pure.

In conclusion, it is interesting to note that the dynatron oscillator has been used as a means of measuring the r.f. resistance of an oscillatory circuit, a full account of the method being given by Hajime Iinuma in the *Proc.I.R.E.*, Vol. 18, p. 537.

WM. D. OLIPHANT.

*To the Editor, The Wireless Engineer.*

SIR,—With reference to Mr. F. M. Colebrook's article entitled "The Dynatron Oscillator," included in the November issue of your journal, I should like to point out that the formula put forward by the author to give the frequency of the circuit becomes simpler and more adequate if "$R_a$" is changed by its value from the equation of the resistance condition.

$$\omega = \frac{1}{LC}\sqrt{1 - \frac{R}{R_a}} = \sqrt{\frac{1}{LC} - \left(\frac{R}{L}\right)^2}$$

This is the well-known Thomson's formula

$$\omega = \sqrt{\frac{1}{LC} - \left(\frac{r}{2L}\right)^2}$$

when $r = 2R$.

I have carried out some experiments with a simple dynatron circuit employing the Mullard P.M.12 and an American valve — 24; I varied the negative resistance by changing the control grid voltage and the heating current either with one or with the other valve, the oscillatory circuit remaining the same, and I have not noticed any change of wavelength. Owing to the fact that "$R_a$" is large in relation to "$R$" perhaps the change of frequency was not noticeable.

However, it appears to me that the negative resistance, given by the reciprocal of the slope of the rectilinear branch of the curve "$I_a - V_a$," has nothing to do with the frequency of the circuit, provided that such resistance is lower than the dynamic resistance of the oscillatory circuit. "$R_a$" becomes automatically equal to the dynamic resistance. After the start of oscillations the amplitude becomes successively larger till one of the two bends of the curve is attained, increasing by this way the resistance till the dynamic resistance has been cancelled. Apparently $\omega$ is independent of "$R_a$," and for this reason I suppose that it is not necessary to take into account the variable negative resistance in the frequency formula.

Lisbon. FRANCISCO PINTO BASTO.

---

## The Stenode.

*To the Editor, The Wireless Engineer.*

SIR,—Our attention has been drawn to the remarks on the "Stenode" contained in your interesting article on the 1931 Radio Exhibition at Olympia, pp. 587 and 588. As some of your contributor's remarks are likely to create a false impression we trust you will allow us to correct them. He states, in referring to the absence of the crystal gate in the models shown, that this particular device leads to "such excessive sharpness of tuning that the receiver becomes difficult to handle and, in addition, unreliable for the reception of stations save those whose frequency is crystal-controlled."

Our American Company, the Stenode Corporation of America, has frequently demonstrated crystal-gate models of the "Stenode," having a measured selectivity curve at least five times as sharp as that of the sharpest tuning super-heterodyne on the American market, the audio response being appreciably better than that of the best "straight H.F." sets in this country, and yet these "Stenodes" have been no more difficult to handle than an ordinary receiver. The very small tuning movement necessary is, of course, taken care of by a double ratio dial, the slow motion being adapted for convenient handling by ordinary users while the more rapid motion serves for quick searching. In practice users have, indeed, preferred our scheme to that of the ordinary sharp-tuning receivers, the dials of which are usually too high geared for accurate tuning and too slow for rapid changing from one end of the scale to the other.

With regard to reliability, the number of stations which suffer from frequency modulation sufficiently to make their reception unreliable on a crystal "Stenode" is so small as to be commercially negligible.

We may also be permitted to refer to the suggestion contained in a paragraph on page 588 that it is possible to obtain "equivalent performance in a super-heterodyne receiver using band-pass couplings." To appreciate the error here it is necessary to remember that many receivers which will adequately separate stations nine or ten kilocycles apart *when the field strengths are comparable*, fail lamentably when called upon to receive, free from interference, a station even thirty kilocycles from the local when this is near by. The "Stenode," by virtue of the much sharper resonance curve it possesses, outperforms any other set in this regard, being able to separate stations cleanly at less than 9 kc. apart, even when the field strength of the local station is disproportionately strong. For example, a standard "Stenode" demonstration at the Long Island laboratories of our American Company was the reception of a Chicago station 900 miles away free from interference from a local 50 kw. station, only nine miles away, occupying the next channel. The demonstration was the more convincing in that the Chicago station is a 5 kw. installation. No other receiver, band-pass or otherwise, could approach this performance.

In conclusion, may we point out that many misconceptions regarding the "Stenode" will be cleared away when it is realised that the *calculated* curve of audio response of a "Stenode," plotted by measuring the frequencies each side of the carrier, and then taking into account the audio correction used, is quite different from the *measured* audio curve? The calculated curve predicts a very poor audio response, while the measured curve shows something closely approaching the ideal. This in itself shows the superiority of the "Stenode" principle to the band-pass scheme.

The fact that so far no satisfactory explanation of this discrepancy has been published need not hinder us from making the fullest possible commercial application of Dr. Robinson's inventions. With monotonous regularity British inventions have been neglected until foreigners, particularly in America, have skimmed the cream of the business, when our belated entry has made the recovery of lost trade difficult if not impossible. There is no reason why history should repeat itself in this case. To those people who would hold up progress along this line until the theory is thrashed out, we would remark that the crystal detector replaced the coherer before the latter was understood, the valve in turn replaced the crystal detector before scientists agreed the theories of rectification, and the "Stenode" methods of sharp resonance and correction will doubtless replace other methods before any general agreement is reached on the theory, and possibly before full credit is given to Dr. Robinson and his associates for their pioneer work.

F. G. PHILPOTT,
London Secretary.
British Radiostat Corporation Limited.

# Some Recent Patents.

*The following abstracts are prepared, with the permission of the Controller of H.M. Stationery Office, from Specifications obtainable at the Patent Office, 25, Southampton Buildings, London, W.C.2, price 1/- each.*

## DIRECTION-FINDERS.

*Convention date (U.S.A.) 18th March, 1929. No. 353038.*

A radio compass designed to give a direct and automatic indication of the direction of a given transmitting station, over an angle of 360°, consists of a number of angularly-disposed receiving loops connected in parallel with a number of field pole-pieces, which convert the received radio energy into corresponding magnetic fields. These control the movement of a rotary armature carrying an indicating needle. In order to avoid any asymmetrical effects, due to the varying characteristics of different amplifiers, each directional loop-antenna is momentarily connected to a common amplifier feeding the magnetic system through a series of commutators operated in synchronism.

Patent issued to W. S. Eaton.

## SELECTIVE RECEIVERS.

*Application date 9th April, 1930. No. 352942.*

In receivers of the type comprising a sharply tuned "gate" designed to separate two programmes differing in frequency by an amount less than the spread of the side-band frequencies, it is found that although the amount of "off-resonance" energy passing through the gate can be reduced to a very small percentage of the desired energy, sufficient may get through to produce an objectional heterodyne beat. To prevent this, an out-of-phase current is passed through a shunt circuit and used to balance-out the off-resonance component. As shown, a

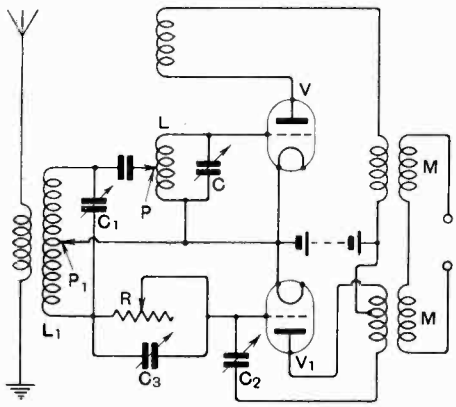


No. 352942.

highly resonant input circuit $L$, $C$ to a back-coupled valve $V$ is fed through tapping points $P$, $P_1$ from a circuit $L_1$, $C_1$. Energy of opposite phase is fed from the lower part of the tapped circuit $L_1$, $C_1$ to a valve $V_1$ provided with a neutralizing condenser $C_2$. The amplitude and phase of this shunt current is controlled by a variable resistance $R$ and condenser $C_3$ so as to counterbalance the undersigned signal components in the common output circuit $M$.

Patent issued to J. Robinson.

## AERIAL COUPLING CIRCUITS.

*Application dates 16th April and 1st September, 1930. No. 353419.*

The input circuit is arranged so that its effective coupling with the aerial can be varied without materially affecting the tuning of the coupled circuit. As shown, the aerial $A$ is coupled to the

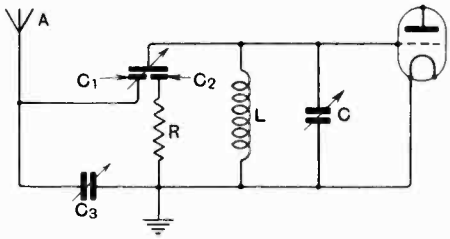


No. 353419.

tuned circuit $L$, $C$ through a differential condenser $C_1$, $C_2$. Assuming the aerial shunt capacity across the differential condenser is 0.0002 mfd., then the maximum capacity of $C_1$ is 0.0002 mfd. when $C_2$ is zero whilst $C_2$ has the same capacity when $C_1$ is zero, so that the constant effective capacity across the circuit $L$, $C$ is 0.0001 mfd., *i.e.*, the sum of two series condensers each 0.0002 mfd. In order to ensure a constant shunt capacity for different aerials, an auxiliary condenser $C_3$ may be inserted as shown. To prevent any tendency to oscillation when volume is reduced, a resistance $R$ of the same value as the ordinary aerial, say 30 ohms, is connected in series with the condenser $C_2$.

Patent issued to C. S. Agate and J. E. Rhys-Jones.

## CAPACITY PICK-UPS.

*Application date, 8th April, 1930. No. 354341.*

In order to utilise a capacity-variation effect, the face of a gramophone record is coated with a metallic layer, and the "pick-up" consists of a small metal plate arranged to travel in close proximity to the surface and at a constant distance from it. The capacity varies in accordance with the displacement of the sound-trace relative to the "pick-up" plate, and the corresponding voltage changes are applied to the grid of a thermionic amplifier.

Patent issued to A. M. Low.

## THERMIONIC VALVES.

*Convention date (Germany) 9th September, 1929. No. 354059.*

One limb of the heated cathode of a valve is so constructed that part of it also functions as a space-charge grid. For instance, as shown, the cathode *K* consists of a straight wire surrounded by a helical return wire. The potential of the latter gradually grows more positive towards its upper end. This helps to dissipate any accumulation of electrons along the straight wire limb and so serves to steepen the valve characteristic.

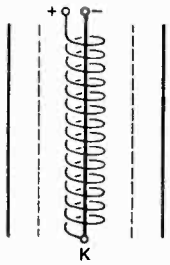


No. 354059.

Patent issued to Telefunken Gesell: fur drahtlöse Telegraphie m.b.h.

## SUPERHETERODYNE RECEIVERS.

*Application date 21st August, 1930. No. 355035.*

To facilitate the application of ganged tuning-condensers to a superhet receiver, the inductances of the aerial, local-oscillator, and tuned intermediate-frequency circuits are each fixed at a value determined by a derived formula which permits each of the associated capacities to be equal at all positions of the master tuning-dial.

Patent issued to The Gramophone Co., Ltd. and A. G. D. West.

## MULTI-ELECTRODE VALVES.

*Convention date (France), 27th April, 1929. No. 354182.*

The ordinary type of screen-grid valve has a high internal resistance, whilst in the pentode, although the resistance is lower, the distance between the anode and cathode is necessarily increased by the interposition of three successive grids. According to the invention a valve is constructed with two interlaced or co-planar grids, one acting as the ordinary control grid, and the other as an accelerating or space-charge grid, whilst a further electrode is inserted between the double grid and the anode to serve as a screening-grid.

Patent issued to A. E. Blondel.

## LOUD SPEAKERS.

*Application date, 14th August, 1930. No. 355024.*

When it is possible for the air waves created by the piston to reach the throat of the horn or diaphragm through paths of different lengths, interference is liable to occur, with a corresponding loss of any higher frequencies of wavelength comparable with the paths in question. According to the invention the air-space in which piston works, and the throat of the horn, are connected by a large number of tubes of small bore, all so curved as to provide paths of identical length for the sound impulses. Alternatively the tubes may vary slightly in length in order to introduce desirable resonance effects.

Patent issued to General Electric Co., Ltd., G. C. Marris, and D. A. Oliver.

## VOLUME CONTROLS.

*Convention date (U.S.A.) 22nd October, 1929. No. 354426.*

To ensure a wide and elastic control of output, the primary winding of the input transformer is shunted by a variable resistance *R*, the moving arm of which is "ganged" with the arm of a potentiometer $R_1$ regulating the biasing-voltage applied to the screening-grid of a high-frequency amplifier *V*. The drawing illustrates the arrangement as applied to a receiving set comprising three screen-grid amplifiers followed by a three-electrode rectifier.

Patent issued to Kolster Brandes, Ltd.

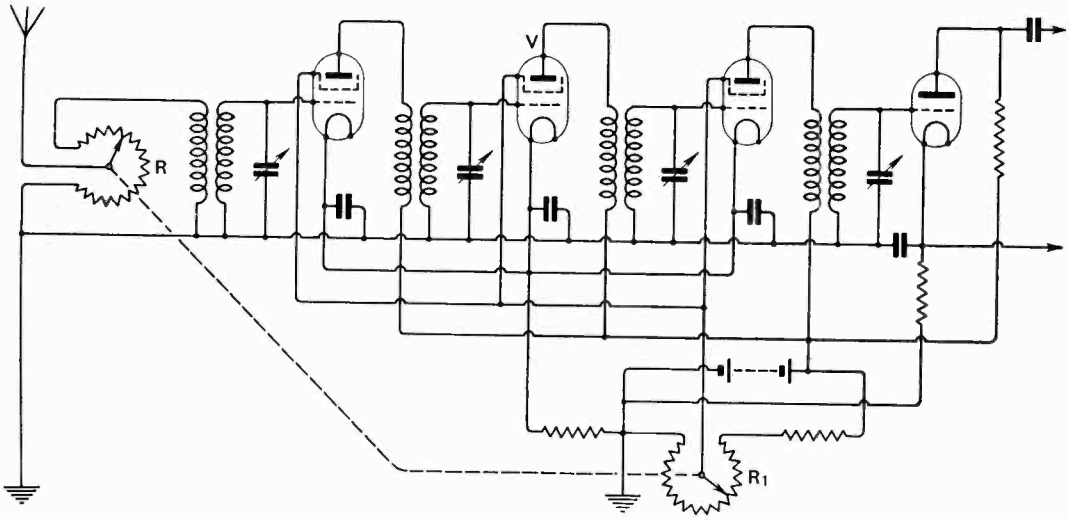


No. 354426.

## OSCILLATION-GENERATORS.

*Convention date (U.S.A.) 23rd October, 1929.*
*No. 354120.*

The frequency of a valve-oscillator $V$ is stabilized by the magneto-strictive action of a rod $A$ of nickel or nickel-iron alloy wound with coils $L$, $L_1$ in

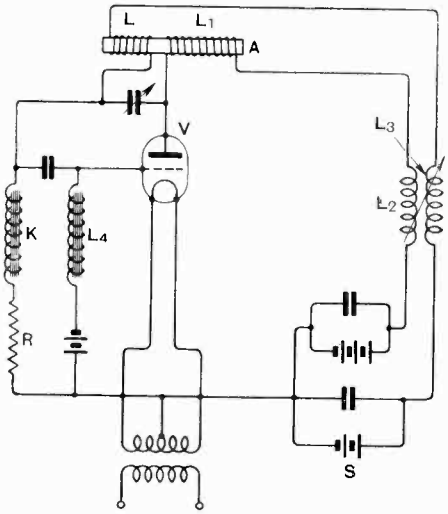


No. 354120.

the grid and plate circuits respectively. Additional feed-back from plate to grid occurs between the coils $L_2$, $L_3$, ensuring a greatly increased power-output without any undue heating of the frequency-control element $A$. The latter is polarised by the anode current from the valve $V$, whilst the output is still further increased by supplying a magnetizing-current from a source $S$ in series with the coil $L$, a choke $K$, and resistance $R$. The coil $L_4$ serves as a high-frequency choke.

Patent issued to British Thomson-Houston Co., Ltd.

## TELEVISION RECEIVERS.

*Convention date (U.S.A.), 11th June, 1929.*
*No. 354863.*

To improve reception two separate light-sources are employed, and each signal element is repeated at an interval of $\frac{1}{2}$ $n$ seconds, where $n$ is the number of complete television pictures received per second. The second or auxiliary light-source is energised from the main amplifier through a shunt circuit so loaded as to introduce the required time lag. An optical system is provided to move both the co-operating light-spots across the receiving screen in the same direction.

Patent issued to Marconi's Wireless Telegraph Co., Ltd.

*Convention date (U.S.A.), 20th August, 1929.*
*No. 354953.*

A light-control screen comprising a number of electro-statically operated shutters is interposed between the receiving screen and a source of light, and each shutter controls the light falling on an elementary portion of the screen, so that its intensity varies with that of the corresponding signal impulse. The arrangement permits the use of a very intense source of illumination.

Patent issued to British Thomson-Houston Co., Ltd.

## DIRECTIVE AERIALS.

*Convention date (U.S.A.) 11th October, 1929.*
*No. 353517.*

The known efficiency of the grounded vertical half-wave antenna is enhanced by increasing its length and inclining it towards or away from the direction of maximum radiation, so that the length of the tilted antenna is equal to a half wavelength plus its projection on a plane parallel to the direction of wave propagation. Thus the antenna $A$, Fig. ($a$) is three-quarters of a wavelength and is tilted to give a horizontal projection of a quarter wavelength. In Fig. ($b$) two antennae, $A$, $A_1$ each a wavelength long, are tilted back to back, to give a horizontal projection of half a wavelength. This arrangement has a bi-directional characteristic which can be made unidirectional by grounding the antenna $A_1$ through a suitable impedance at the point $M$. Fig. ($c$) shows a broadside system

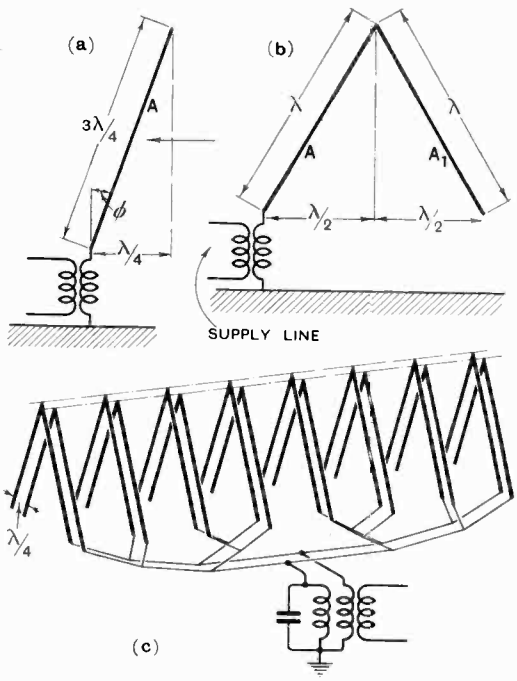


No. 353517.

of inverted-$V$ antennae with their apices in a plane parallel to the direction of wave propagation, and backed at a distance of a quarter wavelength by a similar set of reflectors.

Patent issued to Standard Telephones and Cables, Ltd.